CRISTEC
on-board energy

MADE IN
2027
FRANCE













www.cristec.fr

CRISTEC POWER

THE NEW ON-BOARD ENERGY ECOSYSTEM

After two years of major R&D investments, CRISTEC is reaching a new milestone.
CRISTEC POWER now offers a **global, connected and scalable on-board energy management solution**.
Designed for **boat builders, shipyards, integrators and installers**, this architecture provides a simple to integrate, robust and open solution.

ONE ECOSYSTEM, CONTROLLED ENERGY

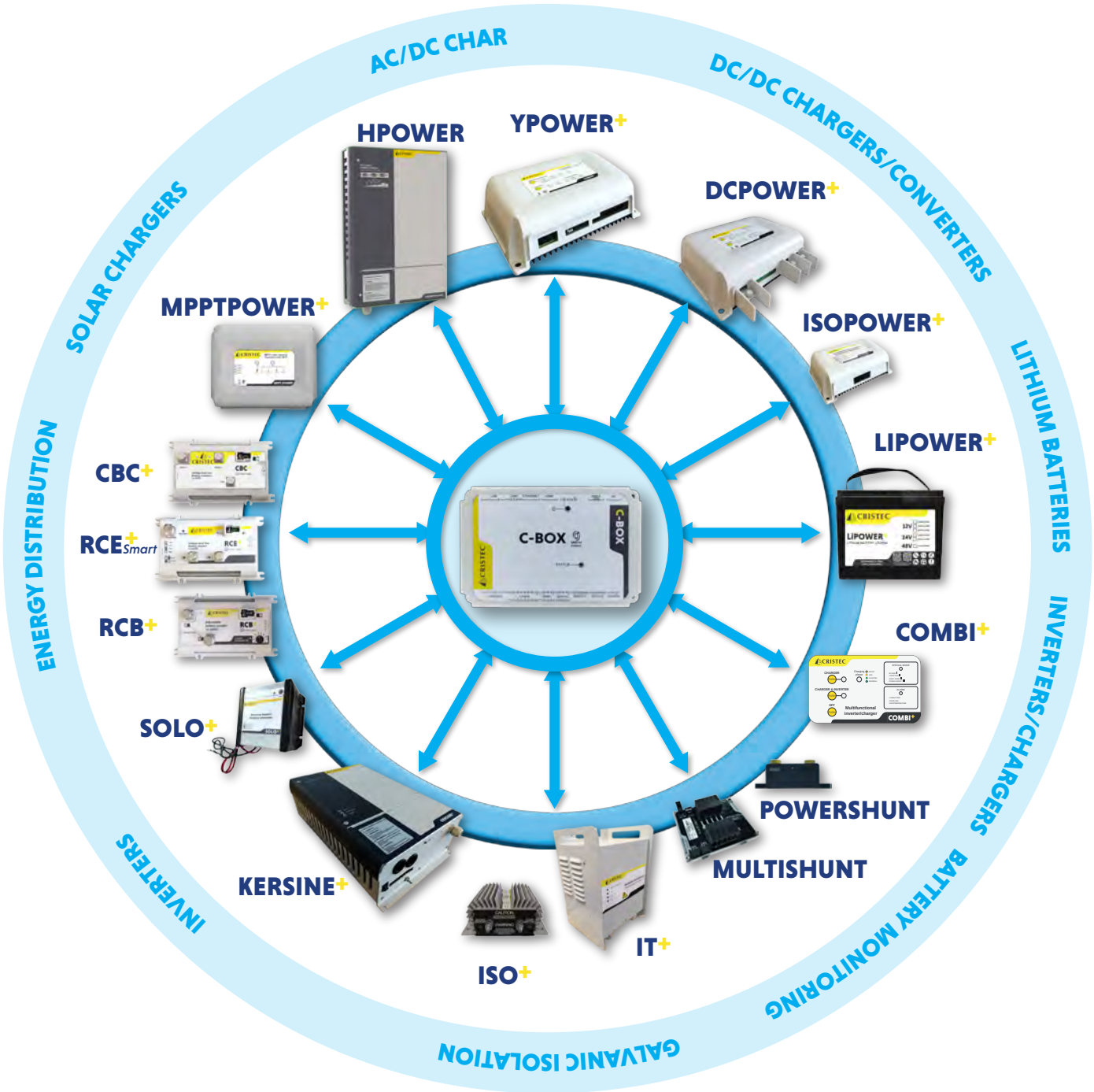

At the heart of the system, the **C-BOX** centralizes data from various devices to **monitor, control, and optimize on-board energy locally or remotely via the cloud**.

Thanks to the **CAN BUS**, devices communicate with each other within a shared architecture.

Installation is quick, featuring a simplified human-machine interface, with fine-tuning accessible via **Bluetooth**® on your smart phone.

OPEN TO THE REST OF THE VESSEL

CRISTEC POWER goes beyond energy management.

Its opened architecture enables communication with other on-board equipment: **lighting, sensors, probes, watermakers and compatible third-party systems**.

Energy data can also be integrated into the boat's electronic systems and multifunction displays via **Ethernet** or **NMEA 2000**.

The goal: a simple, intelligent and easy-to-monitor installation for the safety and comfort of users.

- **12 / 24 / 36 / 48 V** — A multi-voltage architecture
- **LITHIUM READY** — For new-generation batteries
- **CAN BUS + BLUETOOTH + CLOUD** — Connected on-board and remotely
- **OPEN & SCALABLE** — Compatible with the vessel's ecosystem
- **ROBUST** — Developed for harsh marine environment
- **DESIGNED & MADE IN FRANCE** — CRISTEC expertise for over 40 years 🇫🇷

CRISTEC POWER

Mastering on-board energy

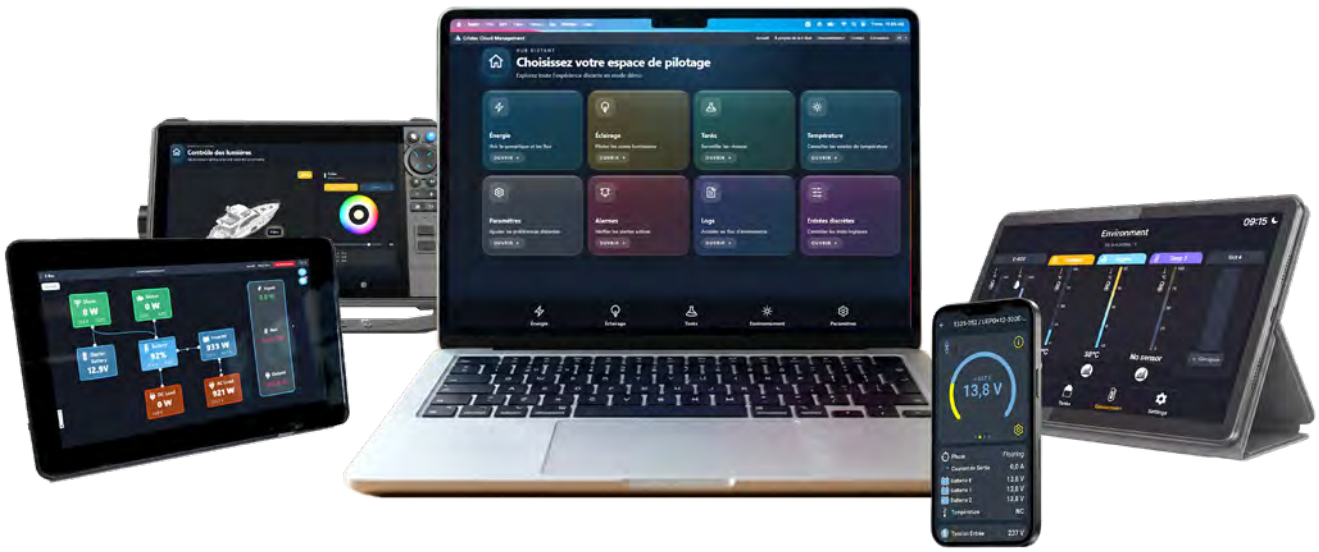

Onboard energy management interface

AN ADAPTABLE ECOSYSTEM

With **CRISTEC** enlarged product range, you can build a robust power system adapted to you specific needs.

Hereafter are few examples, from a simple DC system to more sophisticated ones.

1. SIMPLE SYSTEM USING ONLY DC DEVICES

YPOWER+ operates as a battery charger and DC power supply.

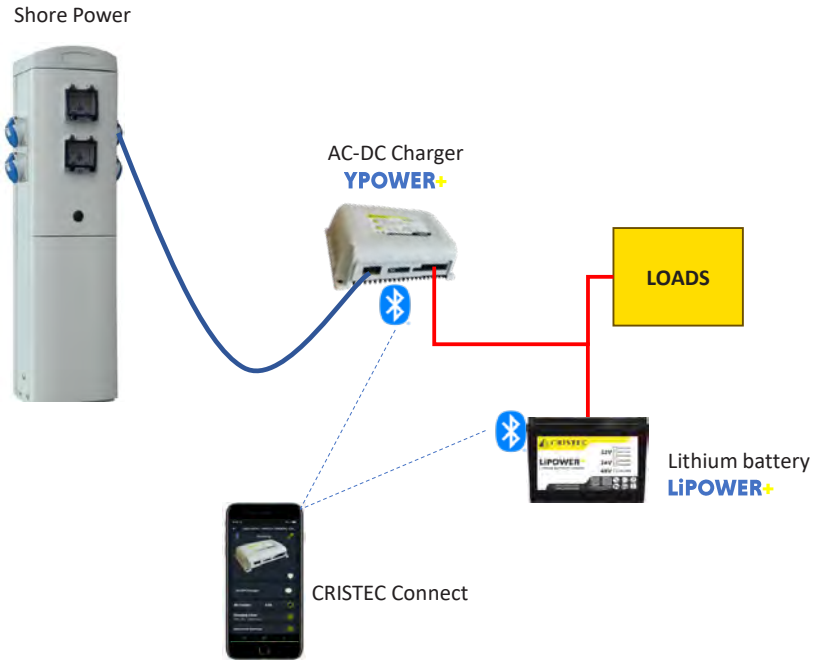

2. AC & DC SYSTEM

This system integrates an inverter to supply 230VAC/50Hz or 115VAC/60Hz. **YPOWER+** has 3 or 4 outputs which allows up to 4 batteries banks to be charged simultaneously.

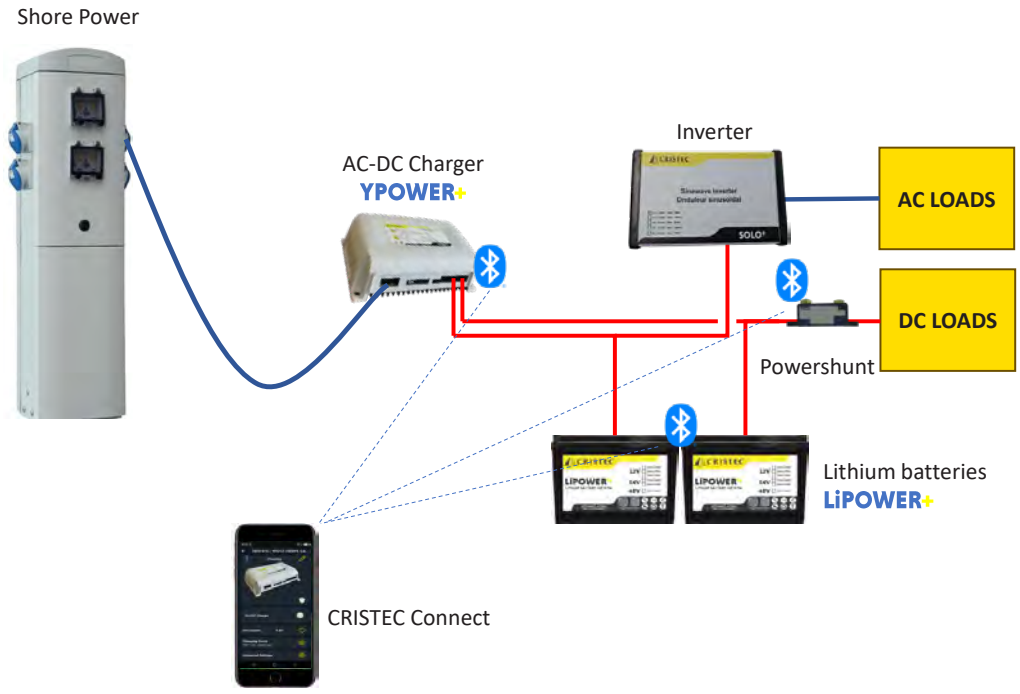

3. AC POWER & SOLAR PV ENERGY

By combining solar energy through **MPPTPOWER+** and AC shore-power through battery chargers like **YPOWER+**, energy consumption can be drastically decreased thanks to the **C-BOX** management.

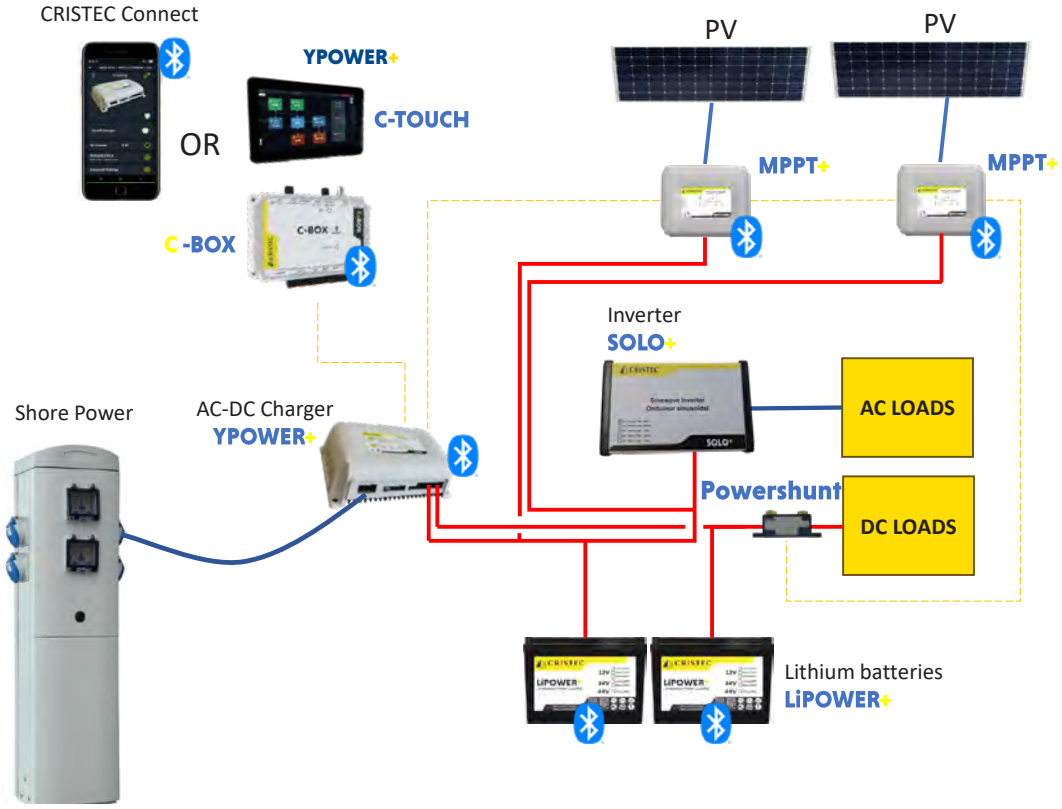

4. FULL ECOSYSTEM

Thanks to the **CRISTEC C-BOX** ecosystem, you can optimize your battery charge either from sunlight or the shore-power.

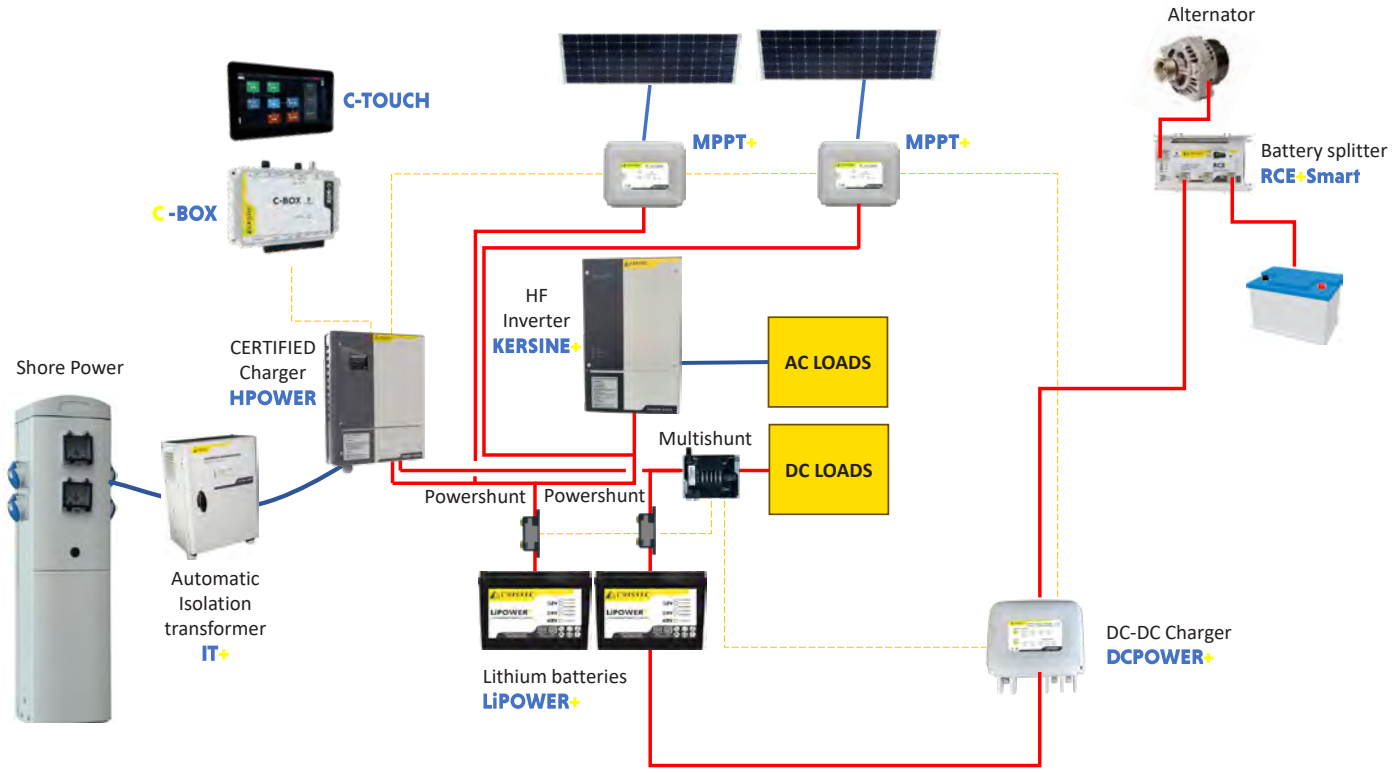

YOU ARE :

OEM, shipyard, boat-builder, electrician, dealer, distributor or experienced sailor ?

You need to design a robust electrical power system ?

SO, PLEASE CONTACT US !

To help you with your project, we provide complimentary advice, recommendations and 3D files of our products.

Tel : +33 298 538 082 **Mail : info@cristec.fr**

www.cristec.fr

A complete range designed for all types of systems

Our mission : through our know-how and skills, we bring value to all our current and future customers to help them to anticipate their needs.

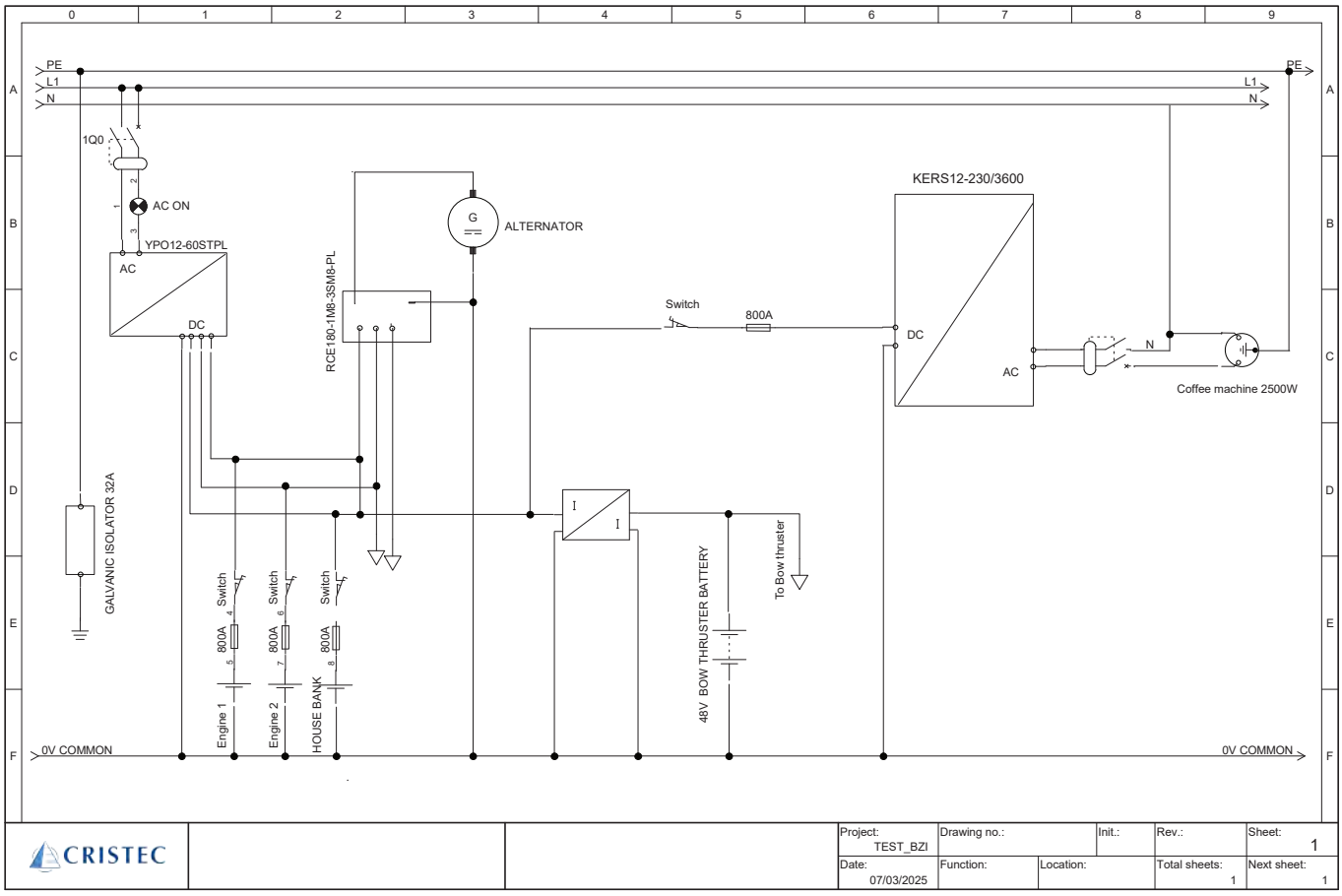

	Page
ENERGY & LIGHTING MANAGEMENT	
• C-BOX	10
• POWERSHUNT	16
• MULTISHUNT	19
MOSFET BATTERY SPLITTERS	
• RCE+ *Smart*	22
SMART BATTERY COUPLER RELAYS	
• RCB+	26
BATTERY COMBINERS	
• CBC+	29
SINEWAVE INVERTERS	
• SOLO+	32
• KERSINE+	35
MPPT SOLAR REGULATORS	
• MPPTPOWER+	42
LITHIUM BATTERIES	
• LIPOWER+	46
GALVANIC ISOLATION	
• GALVANIC ISOLATORS ISO+	50
• ISOLATION TRANSFORMERS IT+	52
ISOLATED DC-DC CONVERTER	
• ISOPOWER+	56
DC-DC CONVERTER - CHARGERS	
• DCPOWER+ up to 1440W	60
AC-DC BATTERY CHARGERS	
• YPOWER+ 12V	76
• YPOWER+ 24V & YPOWER+ marine type-approved class 24V	77
• YPOWER+ 36V / 48V	78
• IP65 YPOWER+ waterproof	80
• HPOWER & HPOWER marine type-approved class	83
SHORE-POWER DISTRIBUTION CHARGERS	
• UEPOWER+	88
OPTIONS	
• Connectors, probes, remote panel, etc.	93
ENERGY MANAGEMENT	
• BATTERY MONITOR + SHUNT : BAT-MON 3.5-3	96
• FLEXCAN / VOLTMETER	98
• FREQUENCY CONVERTERS : FREQ	99
• BATTERY MANAGEMENT : ZENPOWER	100
DISTRIBUTION NETWORK	
• Showroom trolley / Main worldwide CRISTEC representatives	101

Front cover photos: GRAN TURISMO 50 - ALPINE photo Jérôme Kelagopian, POGO STRUCTURE - pogo40, Unsplash/Leonardo-Mendes, PAILLER COMPETITION, ANGATEC — TEC800



Photo: COUACH

Energy & lighting management

C-BOX



Energy management

Lighting control

Tank monitoring

Temperature & humidity monitoring

C-BOX

ENERGY & LIGHTING MANAGEMENT

3 Warranty 3 years

8.9/10 Repairability index





"Smart control, anytime, anywhere"

Presentation

Take full control of your energy and lighting system wherever you are.
The **CRISTEC C-Box** server gives you constant, accurate management of your installation to maximise performance and efficiency. Access your system easily through our **CRISTEC Cloud Management (CCM)** and its **webapp**, or directly via the optional **C-Touch screen** or **Multi-Functional Display (MFD)**.

Key benefits

- Intuitive interface and easy setup
- Remote access, data logging and real-time monitoring
- Optimised energy and lighting performance
- Compatible with multiple display and control options
- Tank level, temperature and humidity sensor monitoring

C-Touch display

The 7" **C-Touch** is the display accessory for the **C-Box**. The seven inch touch screen display can be top/wall or flush mount. It gives an instant overview of your system and allows you to adjust settings. Simply connect the display to the **C-Box** via USB-C and HDMI. The **C-Touch** display has a waterproof design and is easy to install.

MFD integration

Connect the **C-Box** to your **M**arine **M**ultifunctional **D**isplay via **ethernet** and monitor and control your boat's power system from your MFD.
Works with B&G, Furuno, Garmin, Lowrance , Raymarine & Simrad.

CRISTEC Cloud Managment (CCM)

Monitor, control and configure the **C-Box** remotely, over the internet, just like if you were standing in front of the device. This functionality is available on the **LAN**, using the **WiFi** access point of the **C-Box**, or via a **5G dongle** on the USB-A port of the **C-Box**.

Internal memory

C-Box internal memory allows you to store up to 120 days of data.

Perfect energy monitoring & control

Instantly monitor the battery state of charge, power consumption, power harvest from PV, generator and mains, or check tank levels and temperature measurements. Easily control the shore-power input current limit, (auto)start/stop generator(s) or change any settings to optimise the system. Follow up on alerts, perform diagnostic checks and resolve complications remotely.

Easy installation & configuration

The **C-Box** is easily mountable and can also be mounted on a DIN-Rail. Its separate touchscreen can be bolted on a dashboard, eliminating the need to create perfect cut-outs. The **CRISTEC connect Bluetooth® App** enables a quick connection and configuration.

Lighting monitoring & control

The **C-Box** server allows seamless integration and control of up to 128 ligths or zones. You can manage and dim RGBW lights, underwater lights or any LED lights. Zigbee, EnOcean wireless switches can be added to control lights of various zones.

Low Consumption

When unused the **C-Box** switches to standby mode which reduces power consumption to 0.8W.

ENERGY & LIGHTING MANAGEMENT C-BOX

Online demo →

Energy management

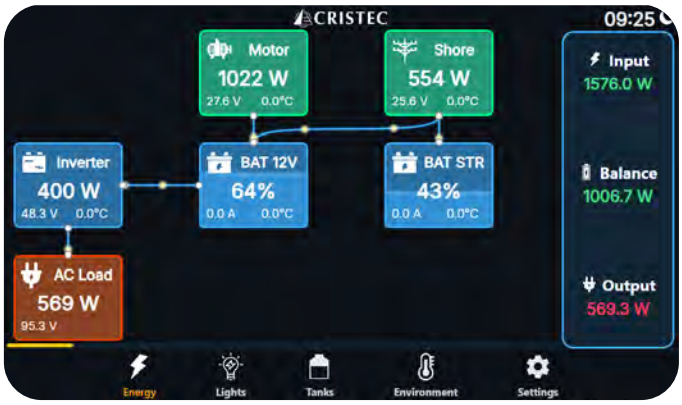

Lighting control

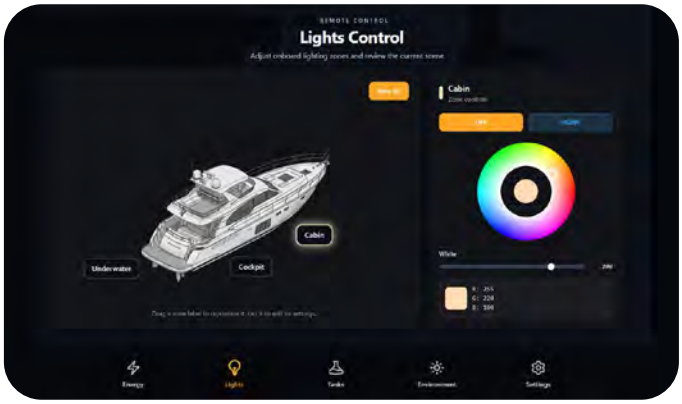

Tank monitoring



Temperature & humidity monitoring



CRISTEC POWER

Mastering on-board energy

Onboard energy management interfaces



ON-BOARD **REMOTELY**



Photo: GRAND TRAWLER 63 - 410 Films

ENERGY & LIGHTING MANAGEMENT C-BOX

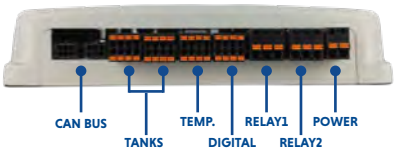

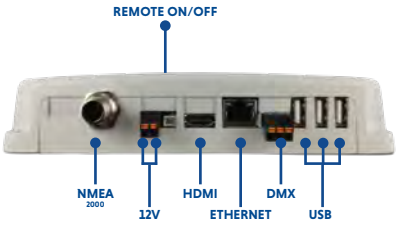



7" C-Touch display	
Mounting	Flush mount with included springs
Resolution	1024 x 600px
Ingress protection	IP54 without connectors (IP20 for connectors)
Outer dimensions (L x l x h)	177 x 112 x 20mm (7 x 4.4 x 0.8in)
Cable length	2 meters (6.5 feet)



Options	
DMX controller	4 Outputs 5A - up to 128 addresses - PN: 002176
Waterproof DMX controller	4 Outputs 5A - up to 128 addresses - PN: 002207
Temperature sensor	PN: 002174
MultiShunt 5	5 channels 25A 12-48VDC bidirectional - PN: MULTISHUNT 5
Powershunt	300, 500, 1000A - PN: POWERSHUNT-300-500-1000
Remote standby switch	002434





ENERGY & LIGHTING MANAGEMENT C-BOX

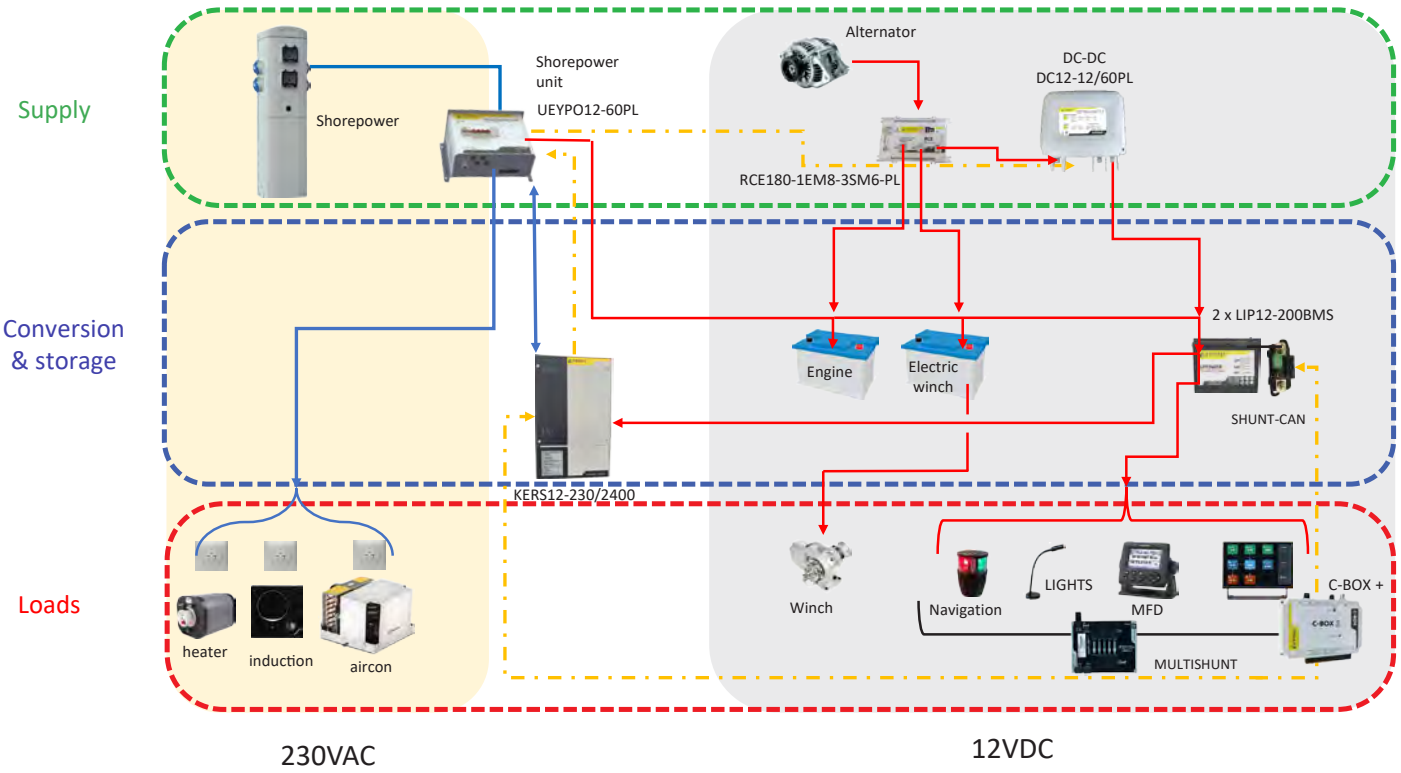

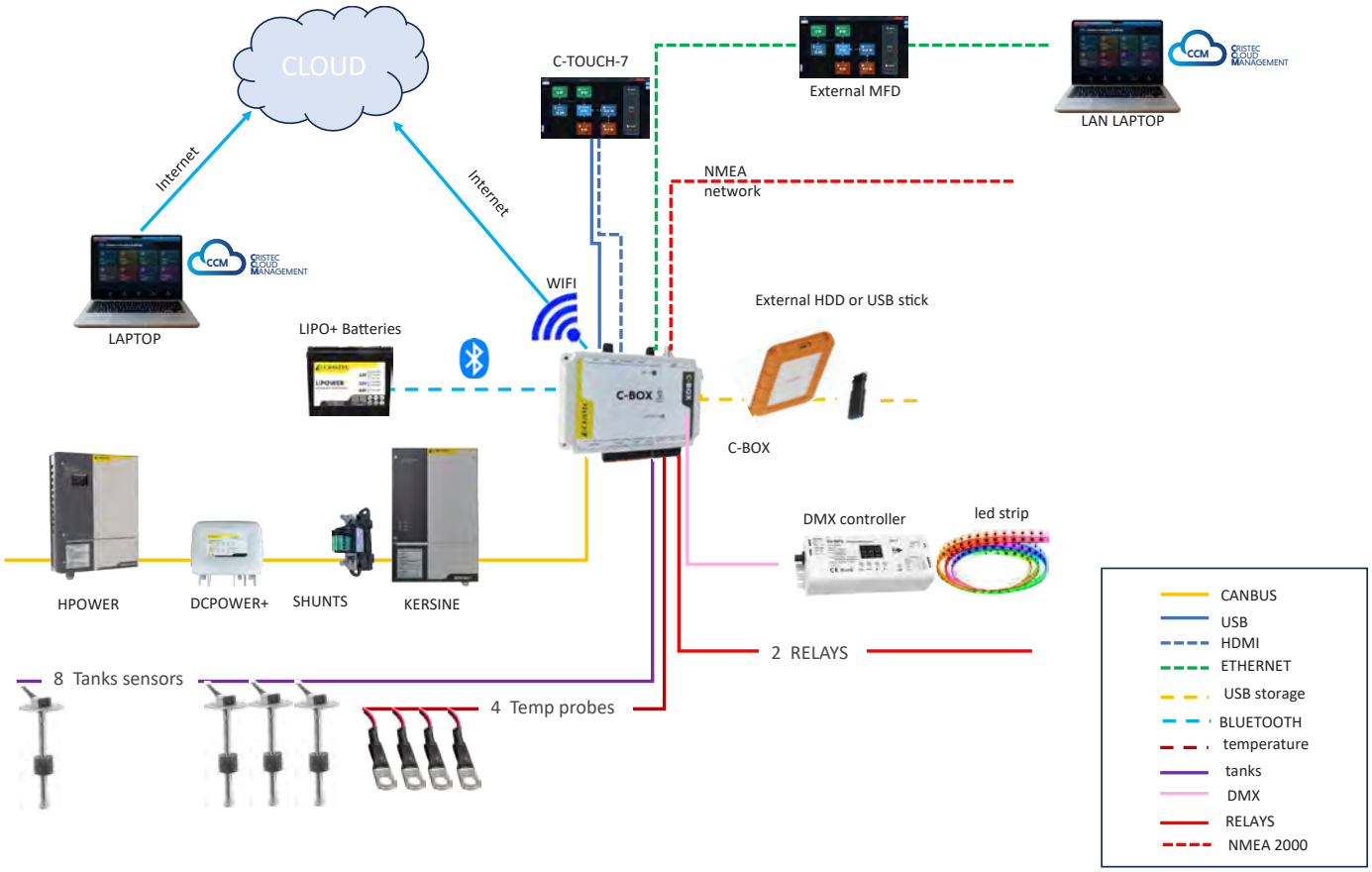

ENERGY & LIGHTING MANAGEMENT C-BOX

12VDC
24VDC
36VDC
48VDC

C-BOX	
Power supply voltage	8 - 65 VDC
Power consumption without C-Touch monitor	2W
Power draw with C-Touch monitor	7W
Standby mode	0.8W
Mounting	Wall with 4 screws or DIN rail
CPU	Quad Core
RAM/storage	2GB/16GB
Maximum CAN BUS devices	256 (16 types x 16 addresses)
Communication ports	
CAN BUS	2 daisy chained sockets (powered)
Ethernet	1Gbit/s RJ45 socket - isolated except shield
HDMI for C-Touch display	1 port
NMEA 2000 (not powered)	1 port
USB (1)	3 ports: 3 x USB A
DMX	1 RS485 port - up to 128 addresses
12V output for external drive	1 port 1A
Remote switch on/off	1 port
Bluetooth®	Built-in
Wifi	Built-in
Input - Output	
Resistive tank level inputs	8
0-10V or 4-20mA universal inputs	2
Temperature sense inputs	4
Digital inputs	4
Relays (2)	2 ports 3 Ways connector: Common, NO (opened) & NC (closed) (1) Voltage up to 30VDC: 8A AC voltage up to 250VAC: 8A
Power supply	1 port
Battery backup clock	Yes with button battery CR2032 13VDC
Casing	
Outer dimensions (L x l x h)	195 x 125 x 38mm (7.7 x 4.9 x 1.5in)
Environment	
Operating temperature	-20°C to 50°C (-4°F to 122°F)
Ingress protection	IP54 without connectors (IP20 for connectors)
Standards	
Security	IEC 62368-1
EMC	EN60945, EN301489-1, EN301489-17
Automotive	ECE R10-6 (pending)
Accessories	
Tank sockets (3)	2 x 4 ways connectors supplied
Temperature socket	1 x 4 ways connector supplied
Temperature sensor	Not included (PN : 02174)
DIN adapter	Built in

(1) USB A ports can be used for multiple purposes such as :
- Logging data
- Updating firmware
- 5G dongle

(2) Relays can be used for programming as an alarm relay, generator start/stop, tank pump, temperature controlled relay or manual operation.
(3) The tank level inputs are resistive and should be connected to a resistive tank sensor. Those ports can each be configured to work with either European (0-190 Ohm); or US tank sensors (240-30 Ohm); or to configure a custom Ohm resistance range between 0 Ohm and 300 Ohm.

POWERSHUNT

8.9/10 Repairability index

Warranty 3 years

12V-24V

36V-48V





Presentation

With CRISTEC **POWERSHUNT** you are able to monitor your complete battery system and/or the current flow of DC energy sources such as solar panels. Thanks to your Bluetooth® connected smart phone or tablet or with a CAN BUS interface , it acts as a stand alone battery monitor.

CRISTEC **POWERSHUNT** is available in 300A, 500A and 1000A versions.

2 operating modes

If you want to monitor a battery, chose battery mode: voltage, current, temperature, capacity and remaining time, number of deep charge and discharge cycles, voltage reading of an additional battery.

For energy source tracking, select the energy mode: you get energy yield in Ampere hour to track current flow of energy sources such as alternators, solar cells or hydrogenerators.

Lithium ready

The **POWERSHUNT** is compatible with all types of batteries including Lithium.

Auxiliary connection

In addition to the Bluetooth® interface and the CAN BUS connector, the POWERSHUNT has an auxiliary connection (v2) that can be used to monitor a second battery for midpoint monitoring or to connect temperature sensor.

Multi voltage

The **POWERSHUNT** is an autonomous device which, thanks to its integrated CAN BUS and Bluetooth® interfaces, allows multi-voltage use: 12V, 24V, 36V or 48V up to 64V.

CAN BUS interface

The **POWERSHUNT** can be connected via CAN BUS to the **C-BOX** in order to store data of the monitored batteries.

Bluetooth® interface

POWERSHUNT is equiped with a Bluetooth® Low Energy , variant of "classic" Bluetooth® . The major advantage of Bluetooth® Low Energy is its low power consumption as it consumes half the power of a classic Bluetooth® .

Internal memory

POWERSHUNT internal memory allows you to store data up to 45 days inside of the shunt, so you can have a long term vision on energy on bank.

ENERGY & LIGHTING MANAGEMENT POWERSHUNT

Basic application on a boat

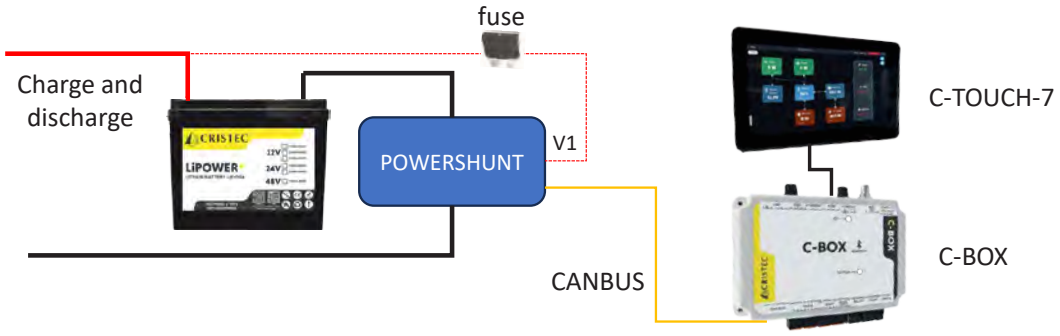

Basic bluetooth® powershunt wiring

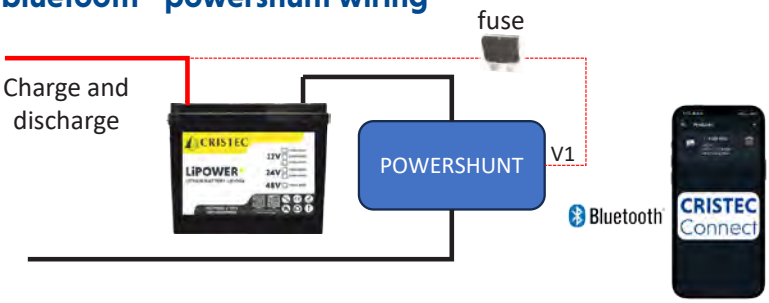

Temperature probe monitoring

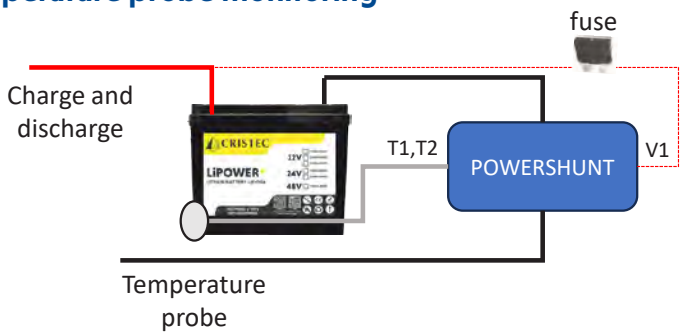

Measuring mid point voltage

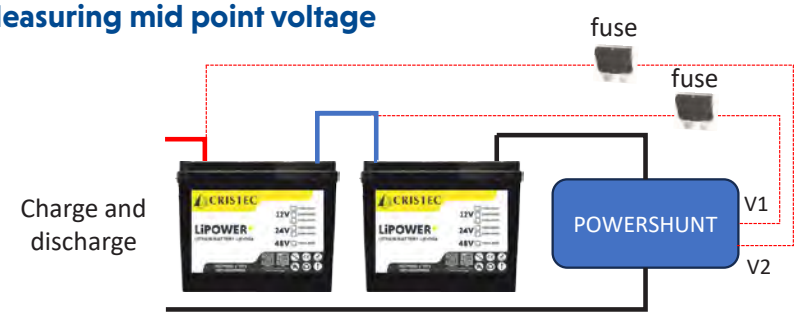

Monitoring with c-box

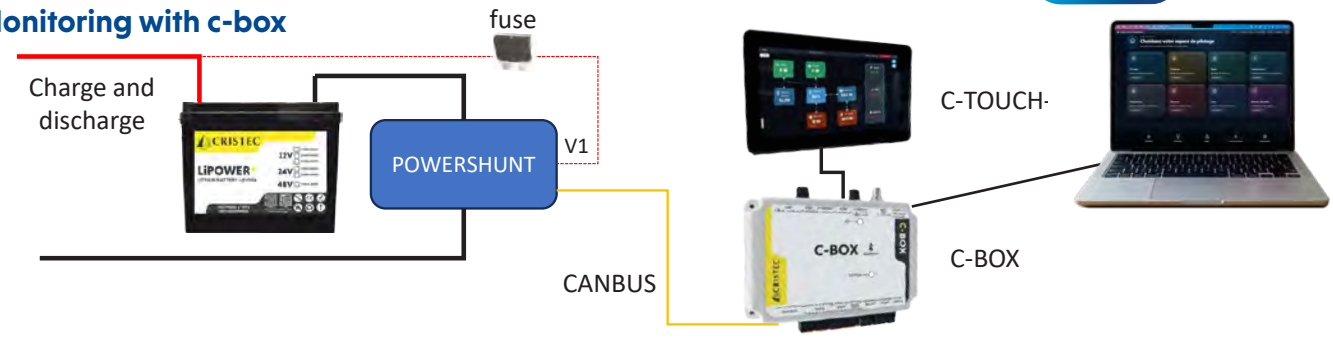

ENERGY & LIGHTING MANAGEMENT POWERSHUNT

POWERSHUNT	300 A / 500 A / 1000 A
Supply voltage range	6.5 - 70 VDC
Current draw	1.2 mA AVG
Input voltage range, auxiliary battery	6.5 - 70 VDC
Battery capacity (Ah)	1-9999 Ah
Operating temperature range	-40°C +50°C (-40°F 122°F)
Measures voltage of second battery & temperature & midpoint	yes:
Temperature measurement range	-20°C +50°C (-4°F 122°F)
CAN BUS port	yes : 2
Resolution & accuracy	
Current draw	+/- 0.01 A
Voltage	+/- 0.01 V
Amp hours	+/- 0.1 Ah
State of charge (0-100%)	+/- 0.1 %
Remaining time	Time to go
Accuracy of current measurement	+/-0.4%
Offset	less than 10 / 10 /20 mA
Accuracy of voltage measurement	+/-0.3%
Installation & dimensions	
Dimensions	300 A: H43 x L120 x l48 mm 500 A: H43 x L120 x l48 mm 1000 A: H43 x L167 x l48 mm
Shunt connection bolts	M10
Standards	
Security	IEC 62368-1
EMC	EN60945, EN301489-1, EN301489-17
Automotive	ECE R10-6 (pending)
Accessories	
Cables	2 cables of 1,5m length with 1A fuse (supplied)
CAN BUS cables	1 m cable: SEEL030319 or 3 m cable: SEEL030320
Temperature probe	2,8 m long: STP-UNI-2.8 / 5 m long: STP-UNI-5.0
Range of Bluetooth® signal	Can be affected by the environment
Data storage	
Data stored	Voltage, current, temperature, capacity and remaining autonomy time, number of deep charge and discharge cycles, mid point deviation, starter battery voltage
Number of days historical data is stored	up to 45

Part number
Powershunt 300
Powershunt 500
Powershunt 1000

Availabitlity Q1 2027

MULTISHUNT



Warranty 3 years

8.9/10 Repairability index

12V-24V

36V-48V

Part number
MULTISHUNT 5

Presentation

MULTISHUNT is the perfect DC sensor to feed the **C-Box** with 5 different producers and consumers status and history input.
With **MULTISHUNT** you are able to monitor on CAN BUS different DC energy:

- **Sources** such as MPPT, alternator, etc.
- or **Consumers** such as lights, windlass, electronics, etc.

General characteristics

- Dimensions : L 85 x l 105 x h 32mm (3.35 x 4.13 x 1.26 in)
- Connexion : Push-in input & output connectors
- Address selection by DipSwitch
- Measure up to 40A coupling 2 chanels

Characteristics per way

- Voltage measurement range : from 9 to 64VDC
- Resolution: 30mV Accuracy : 0.25%
- Resolution: 10mV Accuracy : 0.5%
- Current load capacity : 25A in both directions

Multi voltage

The **MULTISHUNT** is an autonomous device which, thanks to its integrated CAN BUS interface, allows multi-voltage use: 12V, 24V, 36V or 48V up to 64V.

Installation

The **MULTISHUNT** can be mounted on DIN rail (brackets supplied) or with 2 screws (not provided).

CAN BUS interface

The **MULTISHUNT** can be used in stand alone with an electrical appliance or with a **C-Box** + **C-Touch**.

Up to 16

MULTISHUNT are connectable on the same network, so a total of 80 channels.

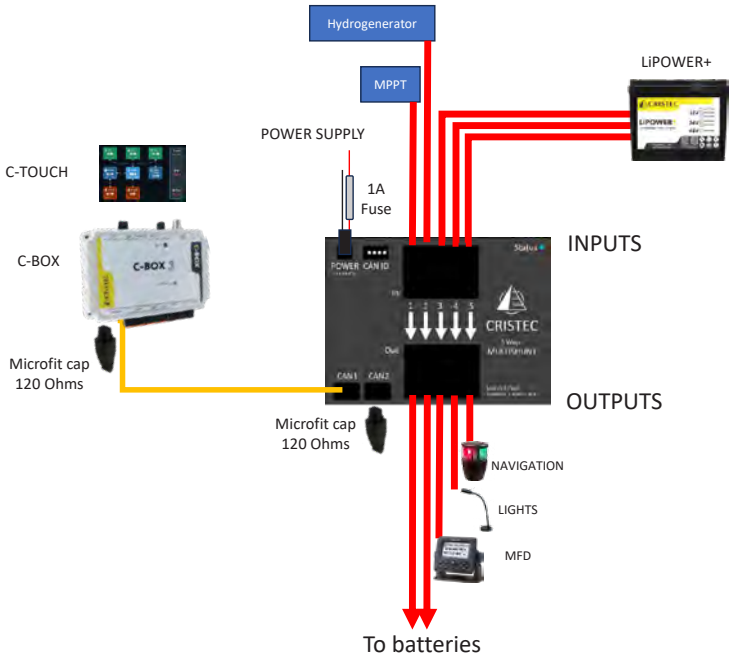



pexels-dominik

MOSFET battery splitters

RCE+ Smart

1 Input - 2 Banks



1 Input - 3 Banks



2 Inputs - 3 Banks



MOSFET technology

Voltage drop free

IG ready

12V 24V

Multi-voltage

Compact & lightweight

RCE+ Smart

Warranty 3 years

8.9/10 Repairability index



Presentation

RCE+Smart battery splitters allow simultaneous charging of 2 or 3 batteries from one or two inputs without connecting the batteries together. Discharging the house battery for example will not result in discharging the starter battery.

MOSFFET technology

The technology used, based on **MOSFET** transistors, ensures negligible voltage drop between the inputs and the outputs. This is a major advantage compared to a diode isolator.

Voltage drop free

Because there is no voltage drop due to **RCE+Smart** isolator, there is no need to increase the output voltage of the alternator.

Multi-voltage

The splitter works with 12VDC and 24VDC voltage, and also allows the use of LiFePO4 (Lithium) batteries.

1 or 2 inputs

2-inputs/3-banks splitters facilitate simultaneous charging of 3 battery banks from 2 alternators or any other DC source (i.e solar).

Smart RCE+

An integrated microprocessor manages the end of the battery charging process, preventing overcharging and alarm triggers, particularly for lithium batteries.

2 or 3 banks

The **RCE+Smart** is used to split an input power source (alternator, solar regulator, hydrogenerator, etc.) to 2 or 3 consumers (batteries, consumers)

IGNITION ready

Some alternators need DC voltage on the B+ output to start charging. Inserting a battery isolator will prevent any return voltage from the battery and the alternator will not start. The **RCE+Smart** splitters have an IG Input that will power the + output when switching on the engine.

Interchangeability

The **RCE+Smart** is designed to be fully interchangeable with previous RCE without any modification.

Compact & Lightweight

The **RCE+Smart** is 2 times thinner and lighter than the previous model but with the exact same hole spacing.

	Item code	Rated current	Number of inputs & Ø	Number of banks & Ø	IG connection (alternator stimulation)	Dimensions (w x h x d)	Weight
1 Input	RCE80-1EM6-2SM6-PL	80A	1 x M6	2 x M6	yes	159 x 100 x 36 mm (6,25 x 3,93 x 1,41in)	0,45 kg (1 lb)
	RCE120-1EM6-2SM6-PL	120A	1 x M6	2 x M6			
	RCE180-1EM8-2SM6-PL	180A	1 x M8	2 x M6			
	RCE180-1EM8-3SM6-PL		1 x M8	3 x M6			
	RCE180-1EM8-2SM8-PL		1 x M8	2 x M8			
	RCE180-1EM8-3SM8-PL		1 x M8	3 x M8			
	RCE220-1EM8-3SM8-PL	220A	1 x M8	3 x M8			
	RCE260-1EM8-3SM8-PL	260A	1 x M8	3 x M8			
2 Inputs	RCE160-2EM6-3SM6-PL	160A (2 x 80A)	2 x M6	3 x M6			
	RCE260-2EM8-3SM8-PL	260A (2 x 130A)	2 x M8	3 x M8			

ELECTRONIC BATTERY SPLITTERS

12V
24V

Typical installation with 2 Inputs - 3 Banks

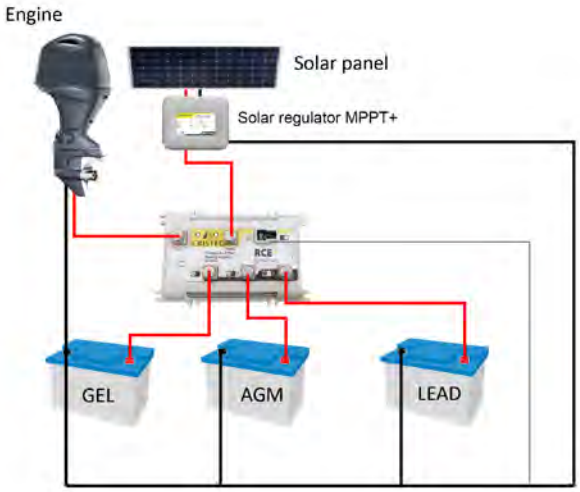

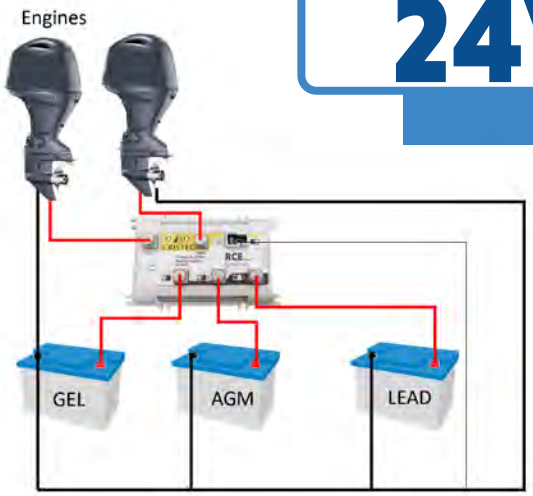



Typical installation with DC conversion

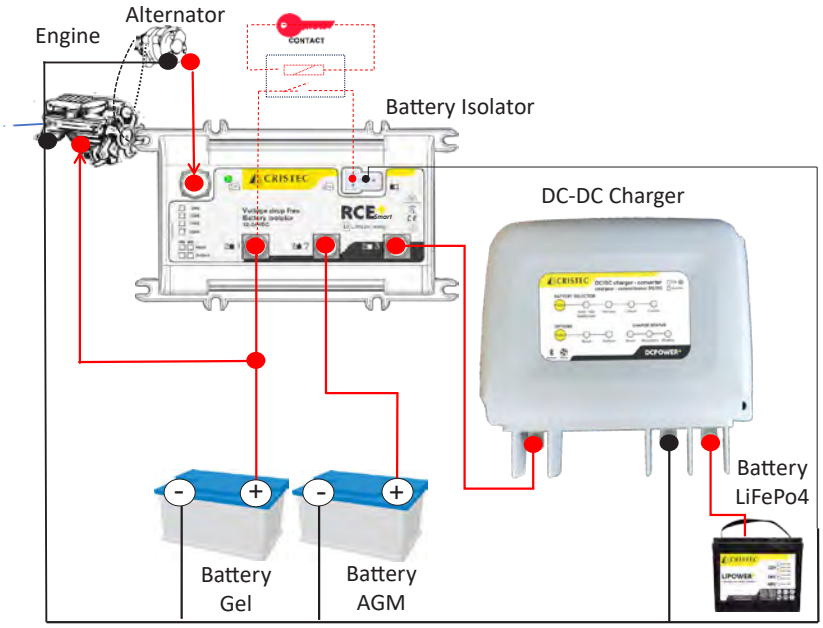

DCPOWER+ converts 12VDC from RCE+Smart splitter into 24VDC Lithium battery voltage.

Typical installation with various types of batteries → see **RCB+**

MOSFET BATTERY SPLITTERS


SAPEURS
POMPIERS DE PARIS
Colonel PAULIN

Smart battery coupler relays

RCB+



Battery combiners

CBC+





Adjustable current



Stabilized charge



Protected against reverse voltage



Compact

RCB+

3 Warranty 3 years

8.9/10 Repairability index



Presentation

With the increasing use of Lithium batteries (LiFePo4) for on-board electrical systems, compatibility between different battery types has become a major issue. Indeed, the cohabitation between starter batteries, often lead-acid, and Lithium batteries for service requires specific management of energy flows, particularly during alternator operation.
The **CRISTEC RCB+** battery relay is designed to share alternator output between the starting and Lithium service batteries while protecting the alternator from overload. By limiting current to the Lithium service battery and preserving current for the engine start battery it ensures safe, balance power distribution.

Why the RCB+ is essential :

- **Alternator protection :** limits current to the Lithium service battery to prevent overload
- **Starter battery protection :** always retains capacity for engine start
- **Marine ready design :** compact, durable and built for harsh conditions
- **Versatile voltage support :** works with both 12VDC or 24VDC systems
- **High capacity performance :** handles alternators up to 200A
- **Fixed or adjustable current :** choose 50A, 80A or fine-tune the service battery current between 30A and 120A

How RCB+ works :

One of the RCB+'s key features is its ability to limit the current flowing between the alternator and the service battery. Thanks to a setting wheel for the adjustable version, the user can adjust the current between **30 and 120A**, guaranteeing flexibility according to the on-board system's needs.
It is recommended to retain around **30% of the alternator's capacity** for the starter battery; for example, for a 110A alternator, the limit could be set at 70A for service bank. This fine-tuned management preserves the alternator from overload while optimizing the battery charge (see illustration).

Compact and lightweight this unique compact relay is designed to be used in harsh environment. Its innovating technology based on low frequency switching mode offers stabilized output charge current and protection against reverse voltage to avoid damages on the alternator.
On the **RCB-ADJ-120A** model the black selector wheel of the encoder can be removed for safety or maintenance reason. In some cases RCB+ can replace a DC-DC charger. The On/Off entry allows the switch On/Off of the charging of the Lithium battery.

Coupling and decoupling principle

12 VDC	Input		Output
Coupling	> 13V for more than 90s	&	>10,5V
	or		
	>13.6V for more than 30s	&	>10,5V
Decoupling	> 16V		
	or		
	< 12.4V for more than 10s		
	or		
	< 12.7V for more than 30s		

24 VDC	Input		Output
Coupling	> 26.0V for more than 90s	&	>21V
	or		
	>27.2V for more than 30s	&	>21V
Decoupling	> 32V		
	or		
	< 24.8V for more than 10s		
	or		
	< 25.4V for more than 30s		

SMART BATTERY COUPLER RELAYS RCB+

12V
24V



Typical installation

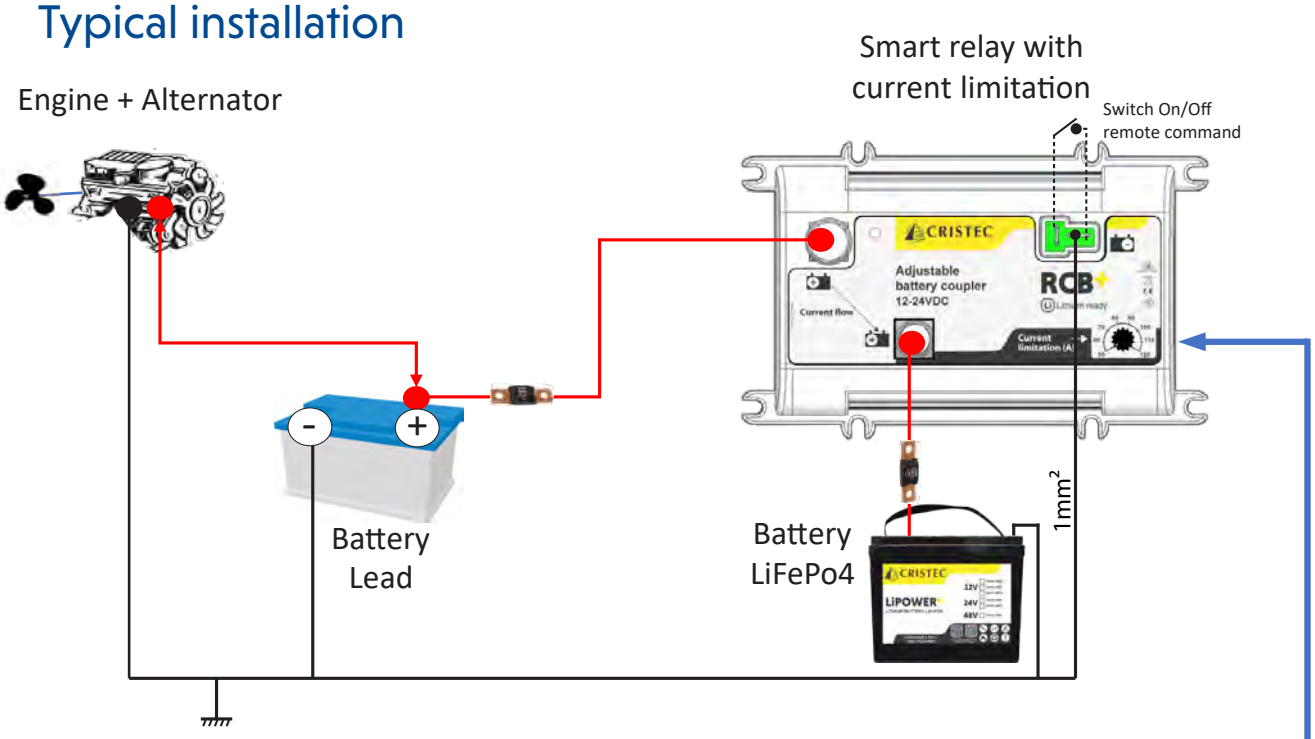

Limit the current in the lithium battery to preserve the alternator and ensure the charging of the starter battery

A unique feature

The remote switch ON/OFF command allows to manage the charge/discharge process of the Lithium battery.

Typical installation with various types of batteries

12V
24V

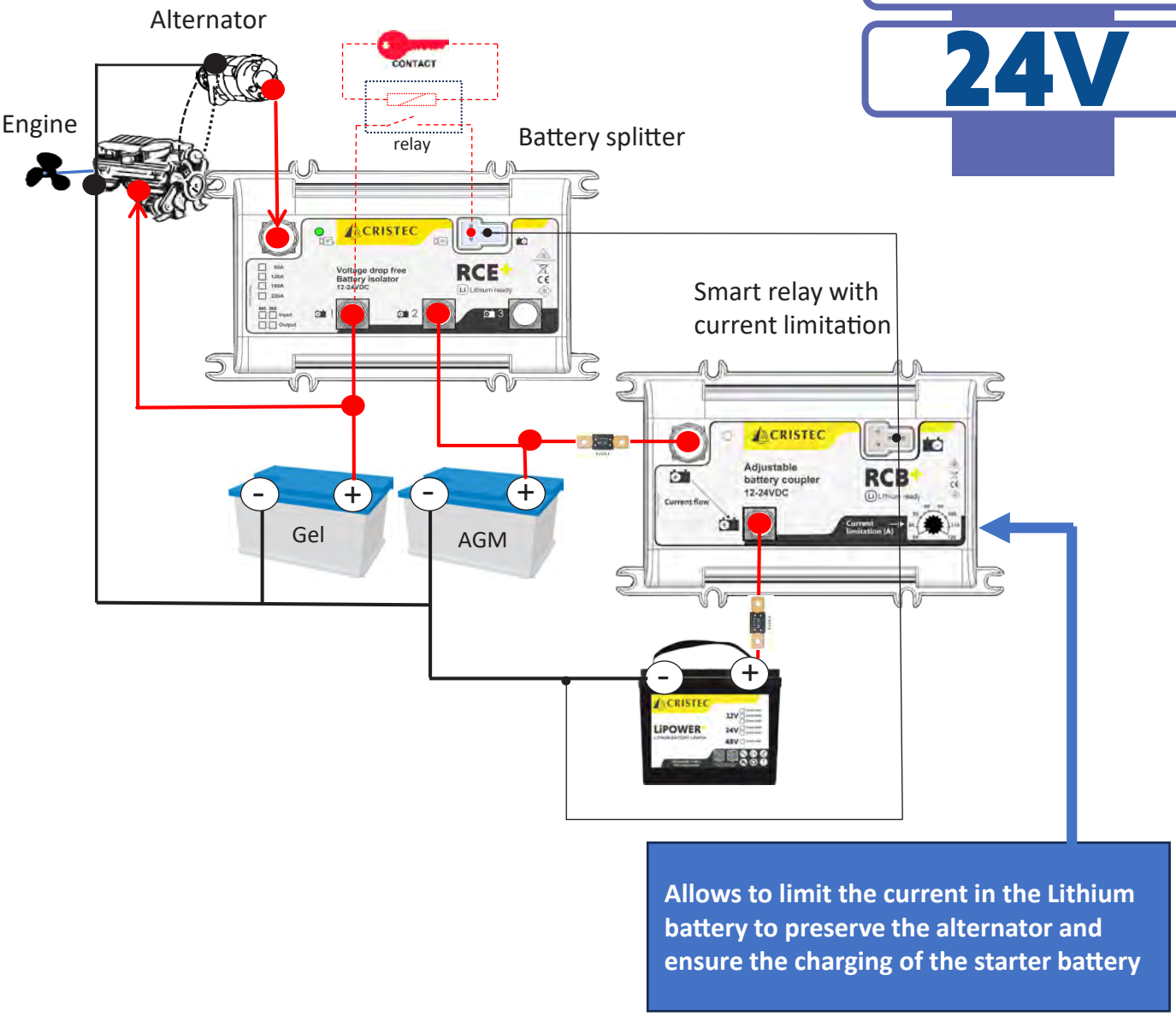

RCB+ smart relay limits current to the Lithium battery from the **RCE+Smart** battery isolator.

Product range	RCB-ADJ-120PL	RCB-50PL	RCB-80PL
Maximum current to the house battery	Adjustable (30 to 120A)	50A	80A
Input			
Input voltage range	From 8VDC to 32VDC		
Voltage	12VDC or 24VDC		
Protection current decoupling	200A +/-10%		
Output			
Both size Input & Output	M8		
Ground isolation	>500VDC		
Maximum voltage drop	0.2VDC		
Environment			
Cooling	Natural (Fanless)		
Operating temperature	From -25°C to +65°C (-13°F to 149°F)		
Consumption	1.2mA@12V / 0.9mA@24V		
Casing			
Length, height, depth	159 x 100 x 36 mm (6,25 x 3,93 x 1,41 in)		
Weight	0,45kg (1 lb)		
Standards			
	RoHS Compliant / IEC60335-1 / ISO8846/SAE J1171 (Ignition protected)		

CBC+

Warranty 3 years

8.9/10 Repairability index



Presentation

CBC+ battery combiners ensure uninterrupted DC power supply to critical equipment, such as electronic engine control systems or hydraulic steering systems. Thanks to their MOSFET technology, they allow two DC power sources to be connected in parallel. The source with the higher voltage automatically supplies power to the equipment. If one source fails, the other maintains the power supply without interruption.

MOSFFET technology

The technology used, based on **MOSFET** transistors, ensures negligible voltage drop between the inputs and the outputs (<0.1VDC). This is a major advantage compared to a diode isolator which lower voltage from 0.4 to 0.8VDC.

Multi-voltage

The **CBC+** operates in 12VDC or 24VDC voltage, and also allows the use of LiFePO4 (Lithium) batteries.

Voltage drop free

Because there is no voltage drop due to **CBC+** combiner, there is no loss of power delivered to the DC load.

Item code	CBC160-2EM6-1SM6-PL	CBC260-2EM8-1SM8-PL
Voltages	12VDC and 24VDC	
Input Voltage tolerance	From 8VDC to 30VDC	
Number of inputs and Ø	2 x M6	2 x M8
Number of outputs and Ø	1 x M6	1 x M8
Maximum output current at 25°C for 1 hour	80A On each input	130A On each input
Maximum output current at 40°C : endless		
Maximum output current at 65°C : endless		
Voltage drop	0,1VDC at 60A	0,08VDC at 100A
Ground isolation	> 500VDC	
Environment		
Cooling	Natural (fanless)	
Operating temperature	from -25°C to +65°C (-13°F to 149°F)	
Casing		
Dimensions (Lxlxh) / Weight	6.26 x 3.94 x 1.42 in / 1 lb	
	159 x 100 x 36 mm / 0,45 kg	
Standards		
	IEC60335-1	

Typical installation

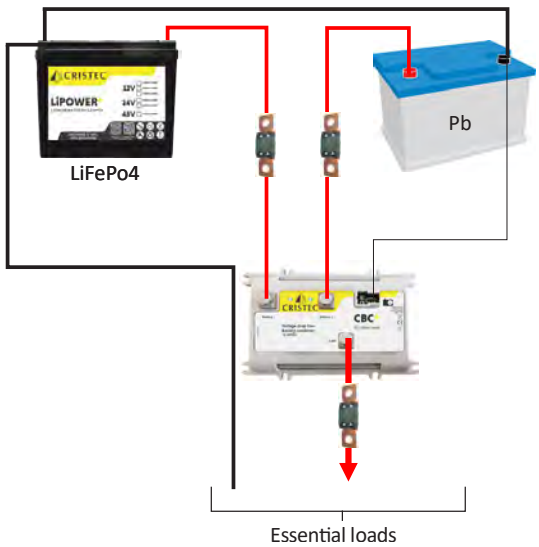



Pure sinewave inverters

SOLO+ up to 1300VA



KERSINE+ up to 3000VA

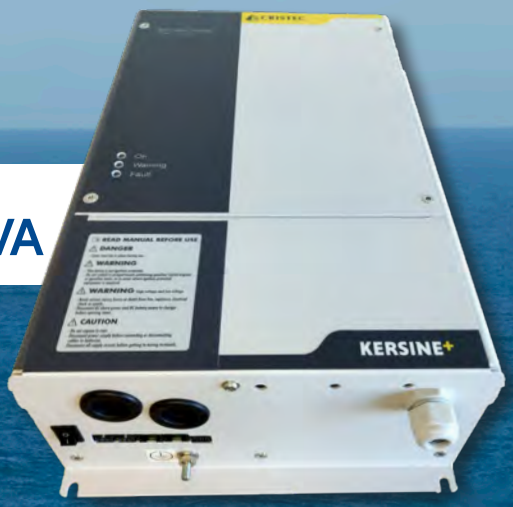

Pure sine-wave

Up to 3600VA

55°C
Temperature withstand

Bluetooth®

Parallel mounting

Lightweight < 7kg

SOLO+

Warranty 3 years

9.4/10 Repairability index



Presentation

The aim of inverters is to convert batteries direct voltage (**12, 24 or 48VDC**) into high quality **230VAC/50Hz** alternating voltage which can be used for all electrical appliances (**115VAC/60Hz or 230VAc/60Hz on request**). The **SOLO+** digital sinewave inverter is the ultimate solution fulfilling the highest requirements in terms of comfort, safety and reliability. **SOLO+** converters are Low Frequency technology which provide simplicity and high peak power overload.

Significant overload

SOLO+ inverters offer significant overload capacity for starting surges: more than 2 times the nominal power during 5 seconds.

Pure sinewave

Thanks to their sinusoidal signal without harmonic distortion, your devices are protected and energy loss is reduced.

High efficiency

SOLO+ inverters have high efficiency (>93%) and low stand-by consumption (around 1%).

High reliability

They meet the highest requirements in terms of comfort, safety and reliability in a limited size and weight.

Battery protection on stop

SOLO+ have a deep discharge battery protection that shutoff the inverter when battery voltage gets lower than 87% of nominal. It automatically restarts when nominal voltage is back.

SOLO+ SINEWAVE INVERTERS

12V

Part Number	SOLO12-230/275-50	SOLO12-230/500-50	SOLO12-230/1000-50
Model*	12V/275VA	12V/500VA	12V/1000VA
Technical features			
Battery tension	12VDC		
Input voltage	10.5 - 16VDC		
Nominal power	200W	500W	800W
Power 30 minutes @ 25°C (77°F)	275W	500W	1000W
Power 5 seconds @ 25°C (77°F)	450W	1000W	2200W
Standby / Idle power	0.3 /2.4W	0,4 /4.6W	0,7/10W
Maximum efficiency	93%	93%	93%
Output voltage	Sine wave 230VAC +/-5% (115V +/-5%)		
Frequency	50 Hz +/- 0.05 % (60 Hz +/-0.05%)*		
Cooling (forced ventilation)	From 45° C (113° F)		
Overheating protection	Yes		
Overload protection			
Short circuit protection			
IP protection index	IP 30		
Cos φ max	0.1-1		
Casing			
Dimensions	175 x 164 x 97 mm (6.85 x 6.46 x 3.82 in)	307 x 164 x 97 mm (12.09 x 6.46 x 3.82 in)	455 x 164 x 97 mm (17.91 x 6.46 x 3.82)
Weight	2.4 Kg (4.4 lb)	4.5 Kg (8.8 lb)	8.5 Kg (17.6 lb)
Options			
Remote control with 5 meters cable switch P/N: SEEL007130	No		SEEL007130

*60Hz on request

24V

Part Number	SOLO24-230/350-50	SOLO24-230/600-50	SOLO24-230/1300-50
Model*	24V/350VA	24V/600VA	24V/1300VA
Technical features			
Battery tension	24VDC		
Input voltage	21 - 32VDC		
Nominal power	300W	500W	1000W
Power 30 minutes @ 25°C (77°F)	350W	600W	1300W
Power 5 seconds @ 25°C (77°F)	650W	1200W	2800W
Standby / Idle power	0.5/3.5W	0.6 /7.2W	1.2/13W
Maximum efficiency	94%	94%	94%
Output voltage	Sine wave 230V +/-5% (120V +/-5%)		
Frequency	50 Hz +/- 0.05 % (60 Hz +/-0.05%)*		
Cooling (forced ventilation)	From 45° C (113° F)		
Overheating protection	Yes		
Overload protection			
Short circuit protection			
IP protection index	IP 30		
Cos φ max	0.1-1		
Casing			
Dimensions	175 x 164 x 97 mm (6.85 x 6.46 x 3.82 in)	307 x 164 x 97 mm (12.09 x 6.46 x 3.82 in)	455 x 164 x 97 mm (17.91 x 6.46 x 3.82)
Weight	2.6 Kg (4.6 lb)	4.5 Kg (8.8 lb)	8.5 Kg (17.6 lb)
Options			
Remote control with 5 meters cable switch P/N: SEEL007130	No		SEEL007130

*60Hz on request

SOLO+ SINEWAVE INVERTERS

48V

Part Number	SOLO48-230/400-50	SOLO48-230/700-50
Model*	SOLO 48V/400VA	SOLO 48V/700VA
Technical features		
Battery tension	48VDC	
Input voltage	42 - 64VDC	
Nominal power	300W	500W
Power 30 minutes @ 25°C (77°F)	400W	700W
Power 5 seconds @ 25°C (77°F)	1000W	1400W
Standby / Idle power	1.1 /5.2W	1.5/12W
Maximum efficiency	94%	94%
Output voltage	Sine wave 230V +/-5% (120V +/-5%)	
Frequency	50 Hz +/- 0.05 % (60 Hz +/-0.05%)*	
Cooling (forced ventilation)	From 45° C (113° F)	
Overheating protection	Yes	
Overload protection		
Short circuit protection		
IP protection index	IP 30	
Cos φ max	0.1-1	
Casing		
Dimensions	175 x 164 x 97 mm(6.85 x 6.46 x 3.82 in)	307 x 164 x 97 mm (12.09 x 6.46 x 3.82 in)
Weight	2.6 Kg (4.8 lb)	4.5 Kg (8.8 lb)
Options		
Remote control with 5 meters cable switch P/N: SEEL007130	No	
Standby system (1 to 20W)	No	Yes

*60Hz on request



KERSINE+

Warranty 3 years

9.4/10 Repairability index



Operating principle

Developed for professional use, in harsh environments, **KERSINE+** inverters offer up to 3,6kVA power. Thanks to their high frequency technology they are lightweight and they offer compact dimensions which are suitable for the widest range of applications.
Optional built-in relay board allows to switch automatically to AC shore-power or genset.

High power

They are powerful enough to sustain high-power AC devices consumption (microwaves oven, coffee machine, hair dryer, etc.).

Temperature withstand

KERSINE+ inverters deliver their rated power at 25°C, minimum 80% power from 40°C and minimum 60% from 55°C according to models.

Pure sinewave

Thanks to their sinusoidal signal without harmonic distortion, your devices are protected and energy loss is reduced.

30A relays board (option)

KERSINE+ inverters have built-in alarms and protections. An optional 30A relay board enables automatic source switching between AC mains, generator, and battery.

Easy and robust installation

Installation is simple : connection through detachable terminal blocks, faston lugs, and ring terminal.. Because of its HF technology **KERSINE+** is very light (3 or 4 times lighter than low frequency technology).

CAN BUS interface

A serial CAN BUS interface allows control and configuration of **KERSINE+** inverters in real time.

Parallel mounting

The inverters can be parallel-mounted to increase the output power to a maximum of 7.2kVA (2 units).

KERSINE+ SINEWAVE INVERTERS

Principle schematic

Kersine stand alone

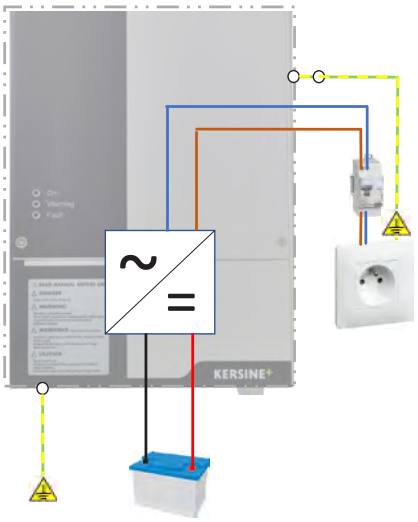

Kersine with relay board option

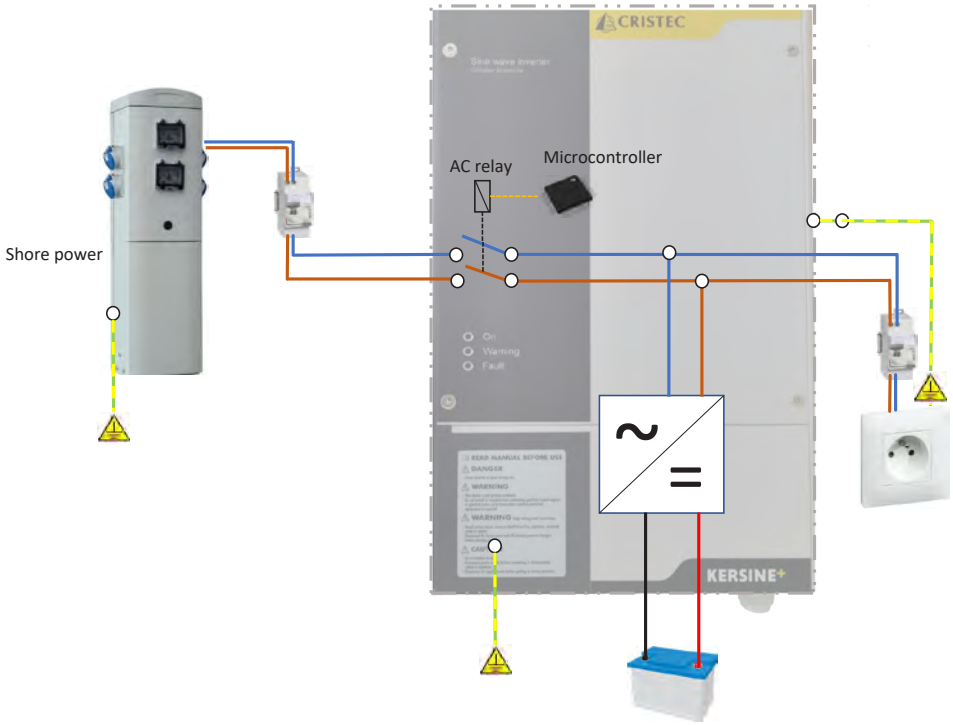

AC output is powered directly by shore-power input. If no input is available from shore and genset, Kersine switches to DC input.

Option :



ON/OFF remote command
P/N : KERS-ON-OFF

Parallel mode (up to 2 units)

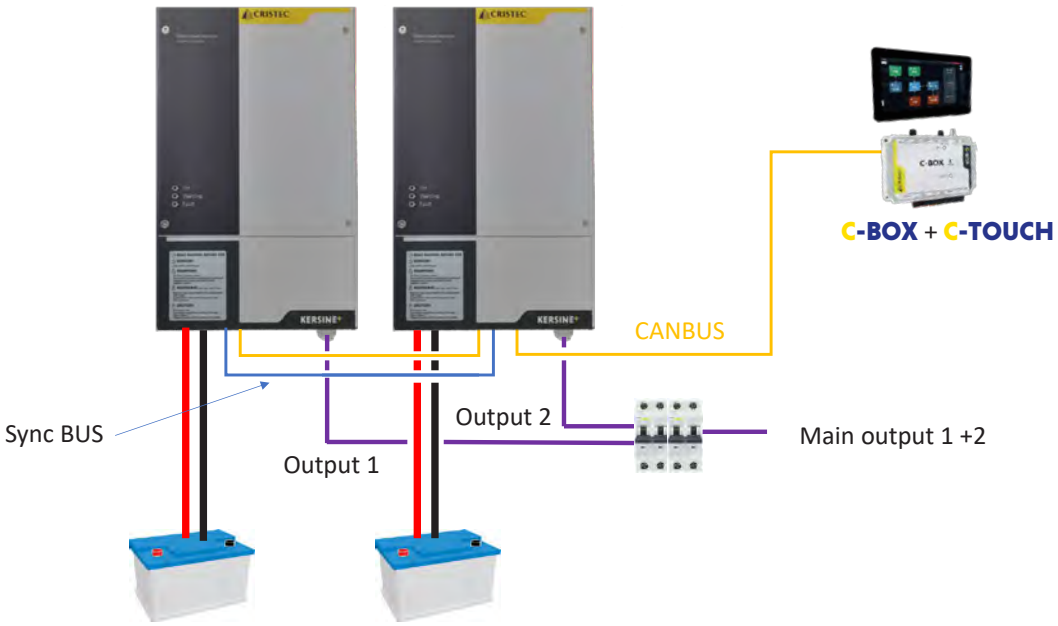

Installation example

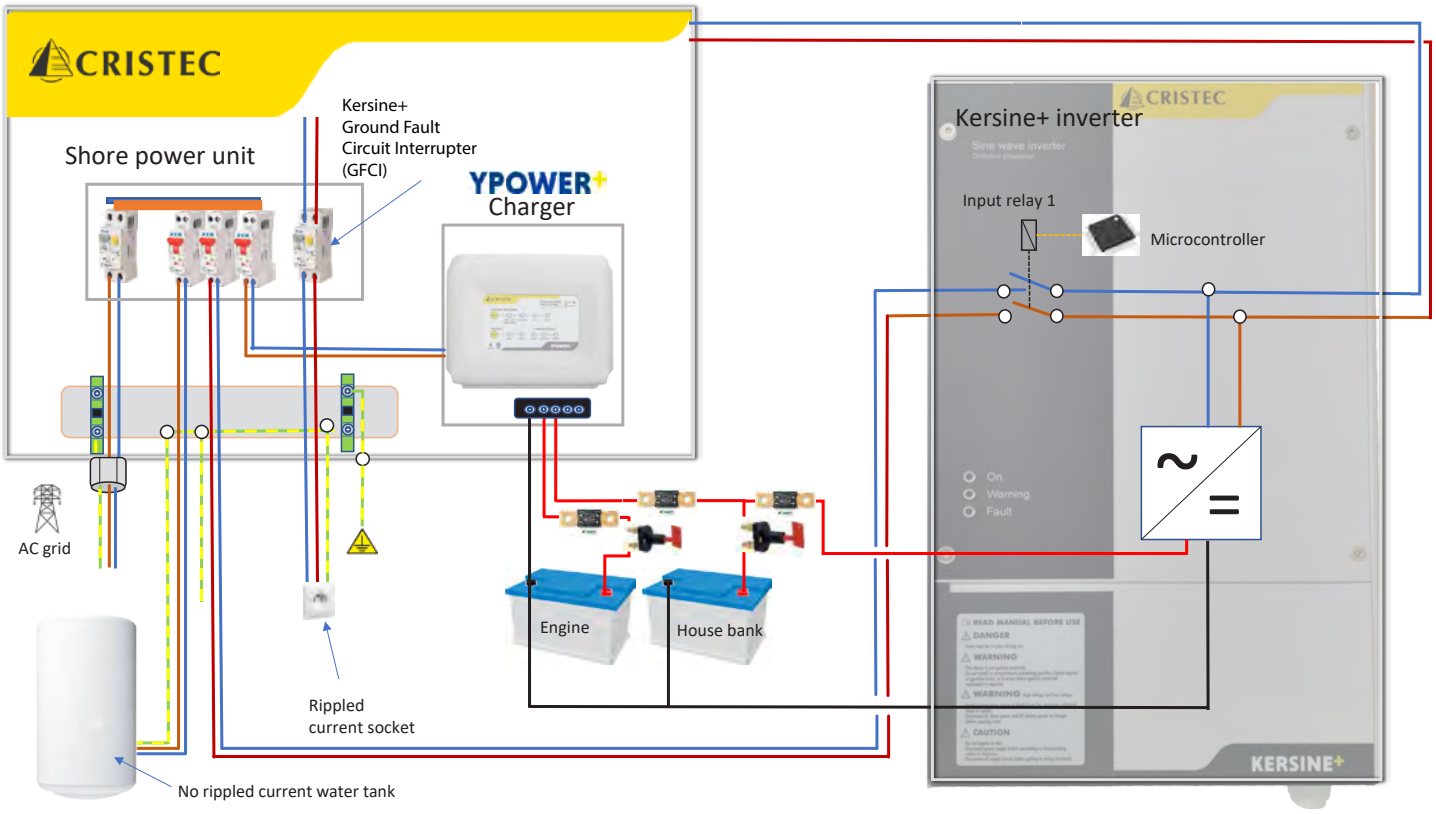

KERSINE+ SINEWAVE INVERTERS

230VAC

Part Number	KERS12-230/2400	KERS12-230/3600	KERS24-230/2400	KERS24-230/3600	KERS48-230/2400	KERS48-230/3600
Model	12VDC 2400VA	12VDC 3600VA	24VDC 2400VA	24VDC 3600VA	48VDC 2400VA	48VDC 3600VA
DC Input						
Voltage	10.5V - 16V		21V - 32V		42V - 64V	
Maximum current	300A	240A	150A	120A	75A	60A
Recommended battery capacity	200Ah	300Ah	100Ah	150Ah	50Ah	75Ah
Recommended Lithium batteries (LiPOWER+)	LIP12-200-BMS	LIP12-300-BMS	LIP24-100-BMS	LIP24-200-BMS	LIP48-100-BMS	
Consumption without load	30W					
Consumption in sleep mode via Bluetooth®	5W					
Consumption in OFF mode (switch OFF)	20mW					
Efficiency	92%					
Input fuse	400A		200A		100A	
AC Output						
Voltage range	230VAC +/- 5%					
Frequency selectable	50/60Hz					
Rated Power at 25°C / 77°F	2000W	3000W	2000W	3000W	2000W	3000W
Power at 40°C / 104°F	1800W	2400W	2000W	3000W	2000W	3000W
Power at 55°C / 131°F	1600W	1800W	1800W	2400W	1800W	2400W
Peak power (3s at 25°C / 77°F)	3000W	4500W	3000W	4500W	3000W	4500W
Waveform	Sinusoidal THD < 3%					
Specific mounting	Up to 2 units in parallel mode					
AC fuses (phase and neutral)	25A					
AC Input						
Voltage range	230VAC +/- 5%					
Frequency selectable	50/60Hz					
Rated Power at 50°C (122°F)	3 x 30A (1 double and 1 single)					
Environment						
Cooling	Electric fans controlled in T° and current					
Operating temperature	From -20°C to +65°C (-4°F to 149°F)					
Storage temperature	From -40°C to +70°C (-40°F to 158°F)					
Relative humidity	up to 70% (95% without condensation)					
Casing						
Length, height, depth / Weight	270 x 410 x 130mm (10.6 x 16.1 x 5.1 in) / 7.4kg (16.3 lb)					
Ingress protection	IP23					
Electronic card protection	Water-repellent varnish (marine environment)					
Communication port	CAN BUS (NMEA on option, item 11 p.93)					
Standards						
CE declaration of conformity	Available on request					
CE / EMC	EN61204-3					
CE / Security - Others	EN60335-2-29 - E marking (pending)					
Protections						
Input	Reverse Polarity (fuses) / Under voltage / Over voltage					
Output	Short-circuitry / Overload / Over Temperature					
Options						
	ON/OFF remote command - P/N : KERS-ON-OFF					
Kersine+ with relay board	**KERS12-230/2400-REL**	**KERS12-230/3600-REL**	**KERS24-230/2400-REL**	**KERS24-230/3600-REL**	**KERS48-230/2400-REL**	**KERS48-230/3600-REL**

KERSINE+ SINEWAVE INVERTERS

115VAC

Part Number	KERS12-115/2000	KERS12-115/3000	KERS24-115/2400	KERS24-115/3600	KERS48-115/2400	KERS48-115/3600
Model	12VDC 2000VA	12VDC 3000VA	24VDC 2400VA	24VDC 3600VA	48VDC 2400VA	48VDC 3600VA
DC Input						
Voltage	10.5V - 16V		21V - 32V		42V - 64V	
Maximum current	300A		150A		75A	
Recommended battery capacity	200Ah	300Ah	100Ah	150Ah	50Ah	75Ah
Recommended Lithium batteries (LiPOWER+)	LIP12-200-BMS	LIP12-300-BMS	LIP24-100-BMS	LIP24-200-BMS	LIP48-100-BMS	
Consumption without load	30W					
Consumption in sleep mode via Bluetooth®	5W					
Consumption in OFF mode (switch OFF)	20mW					
Efficiency	92%					
Input fuse	400A		200A		100A	
AC Output						
Voltage range	120VAC +/- 5%					
Frequency selectable	50/60Hz					
Rated Power at 25°C / 77°F	1600W	2400W	2000W	3000W	2000W	3000W
Power at 40°C / 104°F	1400W	2200W	2000W	3000W	2000W	3000W
Power at 55°C / 131°F	1200W	1800W	1800W	2400W	1800W	2400W
Peak power (3s at 25°C / 77°F)	3000W	3000W	3000W	3000W	3000W	3000W
Waveform	Sinusoidal THD < 3%					
Specific mounting	Up to 2 units in parallel mode					
AC fuses (phase and neutral)	25A					
AC Input						
Voltage range	120VAC +/- 5%					
Frequency selectable	50/60Hz					
Rated Power at 50°C (122°F)	3 x 30A (1 double and 1 single)					
Environment						
Cooling	Electric fans controlled in T° and current					
Operating temperature	From -20°C to +65°C (-4°F to 149°F)					
Storage temperature	From -40°C to +70°C (-40°F to 158°F)					
Relative humidity	up to 70% (95% without condensation)					
Casing						
Length, height, depth / Weight	270 x 410 x 130mm (10.6 x 16.1 x 5.1 in) / 7.4kg (16.3 lb)					
Ingress protection	IP23					
Electronic card protection	Water-repellent varnish (marine environment)					
Communication port	CAN BUS (NMEA on option, item 11 p.93)					
Standards						
CE declaration of conformity	Available on request					
CE / EMC	EN61204-3					
CE / Security - Others	EN60335-2-29 - E marking (pending)					
Protections						
Input	Reverse Polarity (fuses) / Under voltage / Over voltage					
Output	Short-circuitry / Overload / Over Temperature					
Options						
	ON/OFF remote command - P/N : KERS-ON-OFF					
Kersine+ with relay board	**KERS12-115/2000-REL**	**KERS12-115/3000-REL**	**KERS24-115/2400-REL**	**KERS24-115/3600-REL**	**KERS48-115/2400-REL**	**KERS48-115/3600-REL**



ALUBAT OVNI 430 Nicolas MICHON

MPPT solar regulators

MPPTPOWER+



MPPT technology

Bluetooth

Silent

60°C
No derating

Li
3
Lithium
6.941
Lithium ready

CAN BUS interface

MPPTPOWER+

Warranty 3 years

8.9/10 Repairability index





MPPT technology

CRISTEC 's **MPPTPOWER+** range makes it possible to optimize and convert the energy delivered by photovoltaic panels (PV) in order to charge 12, 24, 36 or 48 VDC batteries. Thanks to the implemented MPPT (Maximum Power Point Tracking) technology, the collection of energy from PVs is further improved by 30% compared to PWM technology chargers which are in fact downgraded. In the event of shady conditions, the algorithm implemented by CRISTEC constantly optimizes the energy production of your PVs.

Exceptional performance

CRISTEC **MPPTPOWER+** do not have a fan, which makes them very quiet. They offer an exceptional efficiency, greater than 98%.

No derating

They do not derate up to 40°C ambient temperature. Performance therefore remains unchanged even in an engine compartment which can reach 40°C.

Exceptional communication

Through Bluetooth® and CAN BUS, instantaneous and historical information on voltage, charging current and battery temperature as well as voltage and the current from the PhotoVoltaic (PV) Panels are transmitted to the mobile or to the **C-Box**. If necessary, the **MPPTPOWER+** can communicate using VE Direct. Bluetooth® allows you to configure, monitor, update and log charger data.

Sophisticated electronic protection

- Overheat protection and power reduction in case of high temperature.
- Protection against reverse polarity of PV input
- Protection against short circuits on the battery output

Regeneration mode

This function allows you to start a charging cycle even if the battery has been completely discharged (Lithium). Charging will start automatically at a low current level which will rise as the battery charges.

Minimum PV voltage

With Buck technology, the voltage delivered by the PVs must be greater than Vbat + 5V for the battery pack to start charging.

5-stage charging profile

- **Boost**: charges batteries to 80% of full charge
- **Absorption**: slowly completes remaining charge to 100%
- **Floating**: maintains battery charge
- **Automatic refresh**: prevents sulphation and revitalizes batteries, selectable by keypad pushbutton
- **Reboost**: new automatic Boost phase if DC consumers and the state of batteries so require.

Internal temperature sensor

The temperature sensor automatically reduces the charging voltage when the ambient temperature rises to preserve the battery.

Adaptative charging

MPPTPOWER+ are compatible with all types of batteries:
- Opened classic lead
- Sealed, gel or AGM
- Spiral sealed
- Lithium Iron Phosphate (LiFePO4) with BMS
- Selection of your technology of battery is easy to do through the cover keypad.

Remote control

The **OTD** output of the **MPPTPOWER+** allows you to remotely control the start/stop of the charger without using other communication ports.

SOLAR REGULATORS MPPTPOWER+

MPPTPOWER+

Part Number	MPPT100/40PL	MPPT100/50PL	MPPT150/35PL	MPPT150/45PL
Output				
Battery voltage (auto select or via Bluetooth®)	12/24/36/48V			
Rated charge current	40A	50A	35A	45A
Nominal PV power	12V: 600W 24V: 1200W 48V: 2400W	12V: 750W 24V: 1500W 48V: 3000W	12V: 525W 24V: 1050W 48V: 2100W	12V: 675W 24V: 1350W 48V: 2700W
Charge voltage in «absorption» phase (adjustable)	14,4 / 28,8 / 43,2 / 57,6 VDC			
Charge voltage in «float» phase (adjustable)	13,8 / 27,6 / 41,4 / 55,2 VDC			
Charge algorithm	Adaptative in 5 steps			
Temperature compensation: mV/°C	-18 / -36 / -54 / -72 mV/°C except Lithium			
Peak efficiency	98%			
Input				
Max PV open circuit voltage	100VDC		150VDC	
Low voltage load reconnect	17 / 29 / 41 / 53 VDC			
Self-consumption in idle mode	12V: 5mA / 24V: 2,5mA / 48V: 1,25mA			
Environment				
Operating temperature	-30 à +40°C (No derating)			
Humidity	96%			
Technology	Buck			
Casing				
Dimensions	198 x 150 x 77mm (7.8 x 5.9 x 3 in)			
Weight	1,5 kg (3,3 lb)			
Power terminals	16 mm² (AWG 6) per push-in terminal block			
Fixing screw (wall)	4 M5 round head screws - not supply			
Ingress protection	IP34 (electronic components) & IP22 (connection)			
Standards				
CE / EMC / Safety / CE declaration of conformity	CEI 61000, ECE R10 (pending), EN 50498 (pending) / CEI 62109-1, UL1741, CSA C22.2 / Available on demand			
Protections				
PV reverse polarity / Output short circuit / Over temperature				
Communication				
BUS CAN (daisy chain with 2 connectors), VE Direct, Bluetooth® Low Emission - Power: +9dBm (Frequency: 2412-2484MHz)				
Option				
Connection on removable terminal block	MPPT100/40OEPL	MPPT100/50OEPL	MPPT150/35OEPL	MPPT150/45OEPL

Availability Q1 2027


OUEST FERMETURE
3
PODIOCOM
Fenetrea
SUPER CAR
YACCO
Salaun Holidays
Rencontrer le monde
AXEL
FERMETURES
CRISTEC
Rose
Cléa'Com
SOPREMA
GIFFARD
AMY
MILIN
Père & Fils
AMIS - LETTY
EPI
ARD
LAH

Lithium batteries

LiPOWER+



Lightweight
from < 9kg to 36kg

High
Performance

Long lifespan

Bluetooth®

BMS
integrated

LiPOWER+ BATTERIES

Warranty 1 year



Bluetooth®



Presentation

LiPOWER+ Lithium batteries come in 12V, 24V, and 48V versions (36V on request), with different power capacities to meet your needs. Perfect for electric boat motors, RVs, solar power storage, and more. These batteries are designed for easy installation—no extra parts needed. The built-in BMS protects against over-discharge and overheating, ensuring safety and longevity. **LiPOWER+** batteries can be connected in parallel for increased capacity. Note: series connection is not allowed.

Compact & lightweight

With weights between 9.8 and 36 kg, they provide about a 70% reduction in weight and space, making them a very efficient and easier technology to implement.

Long lifespan

The advantage of **LiPOWER+** batteries is their very high number of charge-discharge cycles. For a depth of discharge (DOD) of 50%, they exceed 5000 cycles.

Bluetooth®

The Bluetooth® function allows monitoring of individual cell voltage, temperature, and visualization of potential alarms from a mobile device (Android or iOS) or **C-Box**.

High performances

Unlike lead-acid batteries, which should not be discharged beyond 50%, **LiPOWER+** batteries can be fully discharged. As a result, the costs of **LiPOWER+** batteries and Lead batteries are equivalent when comparing their useful capacity. However, partial charges are recommended to extend their lifespan.

Installation

LiPOWER+ batteries must be installed in a vertical position.

BMS integrated

Built-in electronic protection (overcharge, under-voltage, temperature, and short-circuit) ensuring safe operation and maximum battery lifespan.

CRISTEC POWER



LIPOWER+ BATTERIES

12V
24V
48V





Part number	LIP12-100-BMS	LIP12-200-BMS	LIP12-300-BMS	LIP24-100-BMS	LIP24-200-BMS	LIP48-100-BMS
Model	12V/100Ah	12V/200Ah	12V/300Ah	24V/100Ah	24V/200Ah	48V/100Ah
Voltage & capacity						
Nominal voltage (VDC)	12.8V			25.6V		51.2V
Voltage capacity at 25°C	100Ah	200Ah	300Ah	100Ah	200Ah	100Ah
Nominal capacity at 0°C	80Ah	160Ah	240Ah	80A	160Ah	80Ah
Nominal energy at 25°C	1280Wh	2560Wh	3840Wh	2560Wh	5120Wh	
Round-trip efficiency	95%					
Cycle duration						
Depth of Discharge (DoD) 80%	4000 cycles					
Depth of Discharge (DoD) 100%	3000 cycles					
Discharge						
Discharge current peak (10s)	330 A	440A				
Maximum continuous discharge current	110A	200A	300A	150A		
Recommended discharge Current	100A	120A	200A	100A	120A	100A
End-of-discharge voltage	10.8V			21.6V		40.5V
Recommended inverter (230 VAC - KERSINE+)	KER12-230 / 2400		KER12-230 / 3600	KER24-230 / 2400	KER24-230 / 3600	KER48-230 / 3600
Recommended inverter (115 VAC - KERSINE+)	KER12-115 / 2400		KER12-115 / 3600	KER24-115 / 2400	KER24-115 / 3600	KER48-115 / 3600
Operating conditions						
Charge temperature	0°C-45°C (113°F)					
Discharge temperature	-15°C-65°C					
Storage temperature	-10°C-45°C (-14°F to 113°F)					
Humidity (without condensation)	Max 95%					
Ingress protection	IP65					
Charge						
Charge voltage (VDC)	14.6V			29.2V		54.8V
Maximal current charge	45A	90A	150A	60A	90A	45A
Recommended maximal current charge	30A	70A	130A	35A	60A	30A
Recommended charger (YPOWER+)	YPO12-30STPL	YPO12-70STPL		YPO24-35STPL	HPO24-60	HPO48-30
Others						
BMS	Built-in					
Bluetooth®	Yes					
Parallel wiring	2 (4 if wiring is carefully done)					
Wiring in series	No					
Storage maximal temperature 25°C (77°F)	1 year if 100% charged, otherwise 8 month					
Power connection (threaded inserts)	M8					
Battery dimensions (LxlxH)	260x173x210mm (10.2x6.8x8.2in)	490x170x250mm (19,29x6,69x9,84in)	530x265x220mm (20,87x10,43x8,66in)	300x160x250mm (11,81x6,30x9,84in)	525x240x220mm (20,67x9,45x8,66in)	530x265x220mm (20,87x10,43x8,66in)
Packaged dimensions (LxlxH)	305x210x250mm (12.10 x 8.27 x 9.84 in)	540x250x310mm (21,26x9,84x12,20in)	600x340x300mm (23,62x13,39x11,81in)	350x220x300mm (11,81x8,66x11,81in)	550x290x285m (21,65x11,42x11,22in)	575x350x310m (22,64x13,78x12,20in)
Battery weight	9.8Kg (21.6lbs)	19.6Kg (43.2lbs)	29Kg (63.9lbs)	18.3Kg (40.3lbs)	35Kg (77.1lbs)	37.8Kg (83.3lbs)
Packaged battery weight	10.5Kg (23.1lbs)	20.7Kg (45.6lbs)	30.5Kg (67.2lbs)	19Kg (41.8lbs)	36.2Kg (79.8lbs)	40Kg (88.1lbs)
Number of cells in series	4			8		15
Standards						
Security	UN38.3, CE					



Galvanic isolation

GALVANIC ISOLATORS



ISOLATION TRANSFORMERS



Automatic soft-start

50°C

Temperature withstand

Parallel connection

Automatic vs manual

ISO+

Warranty 3 years

8.9/10 Repairability index



- Prevents corrosion
- Worldwide compatibility
- Compact & lightweight

Principle

The galvanic isolator prevents galvanic corrosion. It blocks the low-voltage DC currents that enter your boat via the shore-power earth wire. These currents can cause corrosion to the boat's underwater metals, like the hull, propeller, shaft and so on.
The galvanic isolator consists of two diodes connected in antiparallel. The galvanic isolator is connected between the shore earth connection and the central earth point in the boat.

The advantage of the galvanic isolator is its low weight and size. In contrast to a galvanic isolation transformer that ensures full isolation (live, neutral, and ground), a galvanic isolator does not prevent corrosion that may arise through the neutral line, particularly when the neutral line is grounded by on-board electrical components, including suppression filters or other devices.

Presentation

CRISTEC offers two ranges:
- European range that includes models with 16A, 32A and 50A capacities.
- North American range which is specifically designed for the North American market and holds 32A & 64A ABYC A28 and Fail Safe certifications.

Typical installation

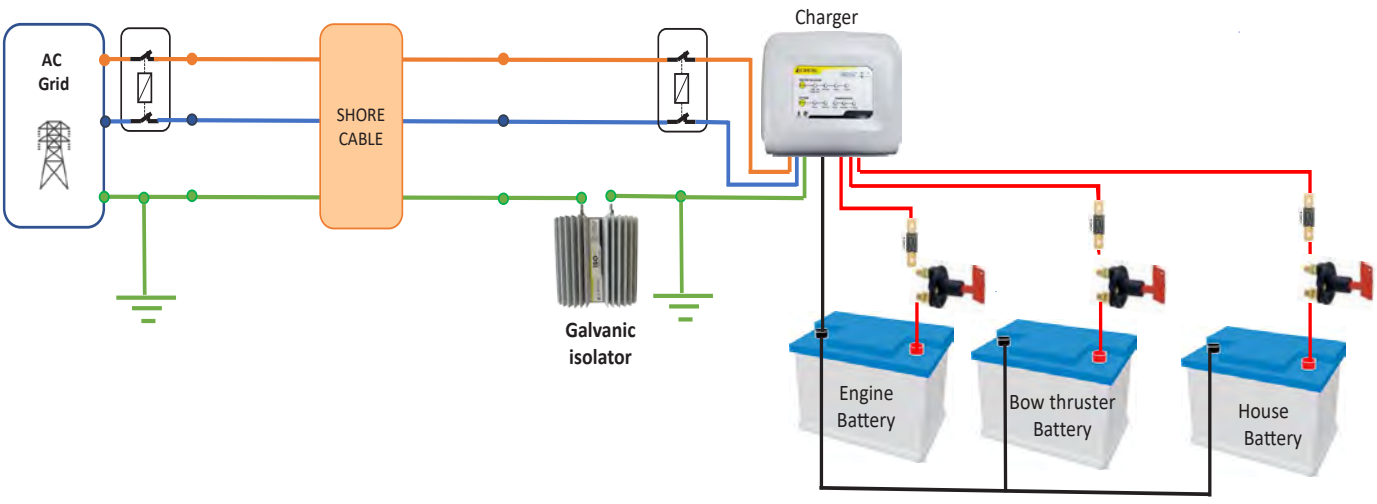

115V
230V

Principle schematic

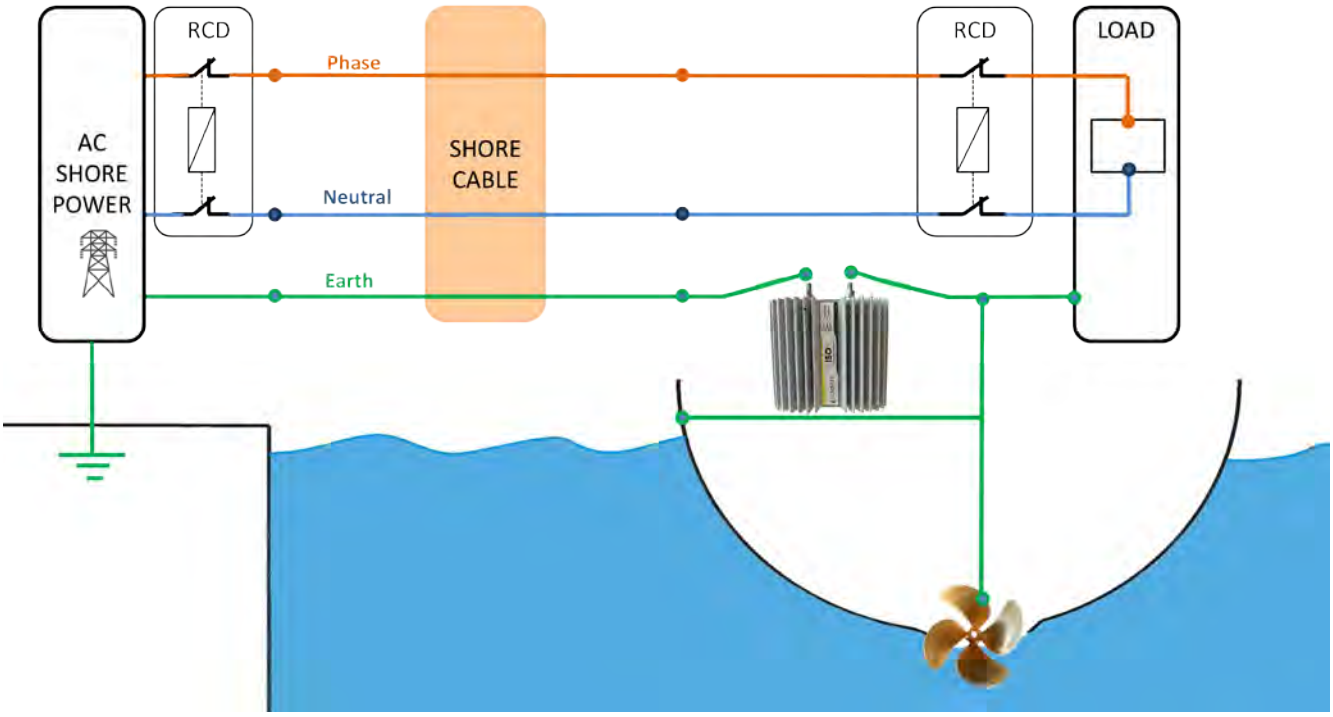

Part number	ISO16PL	ISO32PL	ISO50PL	ISO64PL	ISO32PL-A28*	ISO64PL-A28*
Maximum current	16A	32A	50A	64A	32A	64A
Peak current (20ms)	800A	1600A	3200A			6400A
Connection	2 x M6					
Environment						
Cooling	Natural (Fanless)					
Operating temperature	From -25°C to +65°C (-13°F to 149°F)					
Protection	IP 34					
Material	Anodized aluminium / PC / Epoxy					
Casing						
Width, Length, Height	150x135x70mm (5.91 x 5.31 x 2.76in)		150x255x70mm (5.91 x 10.04 x 2.76in)	150x330x70mm (5.91 x 13 x 2.76in)	150x135x70mm (5.91 x 5.31 x 2.76in)	150x255x70mm (5.91 x 10.04 x 2.76in)
Weight	0,7 kg (1.54 lbs)		1,5 kg (3.31 lbs)	2 kg (4.41 lbs)	0,7 kg (1.54 lbs)	1,5 kg (3.31 lbs)
Standards						
	-				ABYC A28 (pending)	

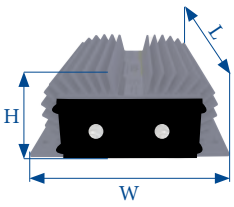

* Available on request

IT+

Warranty 3 years

8.9/10 Repairability index



Presentation

The **IT3600** range of CRISTEC isolation transformers function is to provide a complete (phase, neutral & earth) galvanic isolation between the boat on-board power supply network and the shore. This separation prevents ground current circulation between the supply and distribution lines, which are the source of corrosion on the metal parts of a vessel in contact with sea water (phenomenon similar to electrolysis). This isolation function is made of a toroidal transformer with dual primary and secondary winding.

Automatic soft-start

The system has an automatic soft-start function to limit inrush current when the device is switched on, avoiding inadvertent tripping of shore network protections (premagnetising circuit).

Parallel connection

2 isolation transformers can be connected in parallel to reach a maximum power of 7200W (32A @ 230VAC). Please contact us for advice.

Thermal protection

The device has an automatic 2 speed ventilation system (half speed below 45 °C in the casing, full speed above 45 °C). A safety thermal sensor protects the equipment in case of overheating (too high ambient temperature, overloading, etc).

Automatic versus Manual

Automatic version of IT3600 isolation transformer automatically adapts to the grid voltage of the power source whether 115 or 230 VAC. Manual transformer requires the shift of internal cables. The grid frequency is not converted.

ISOLATION TRANSFORMERS

115V
230V

Principle schematic

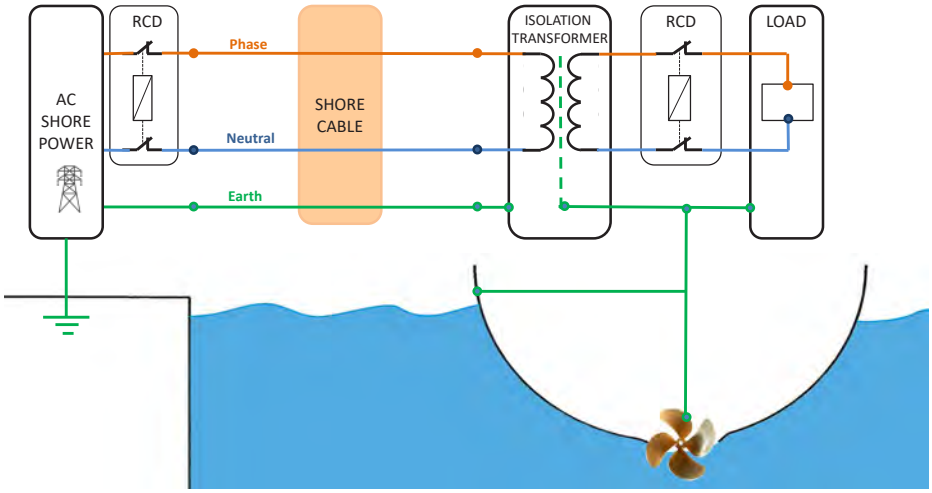

Parallel connection



Part Number	IT-3600-M	IT-3600-A
Commutation	Manual	Auto
Input voltage	115/230VAC	
Output voltage	115/230VAC	
Frequency	50/60Hz	
Current	16/32A	
Power	3600W	
Soft-start	Yes	
Ambient temperature	From -20°C to +40°C (-4°F to 104°F)	
Ventilation	Half speed (reducing acoustic noise)	
Humidity	95% without condensation	
Transformer type	Toroidal	
Casing material	Steel with anti-corrosion treatment	
Ingress protection index	IP20 (IP21 on request)	
Dimensions	h 360 x L 257 x l 221 mm (h 14.17 x L 10.12 x l 8.70 in)	
Weight	24 kg (52.9 lb)	
Standards	IEC 60076	



Photo : DELPHIA_12_SEDAN_IMAGE_EXTERIOR_PIRIAC (61)

Isolated DC-DC converters

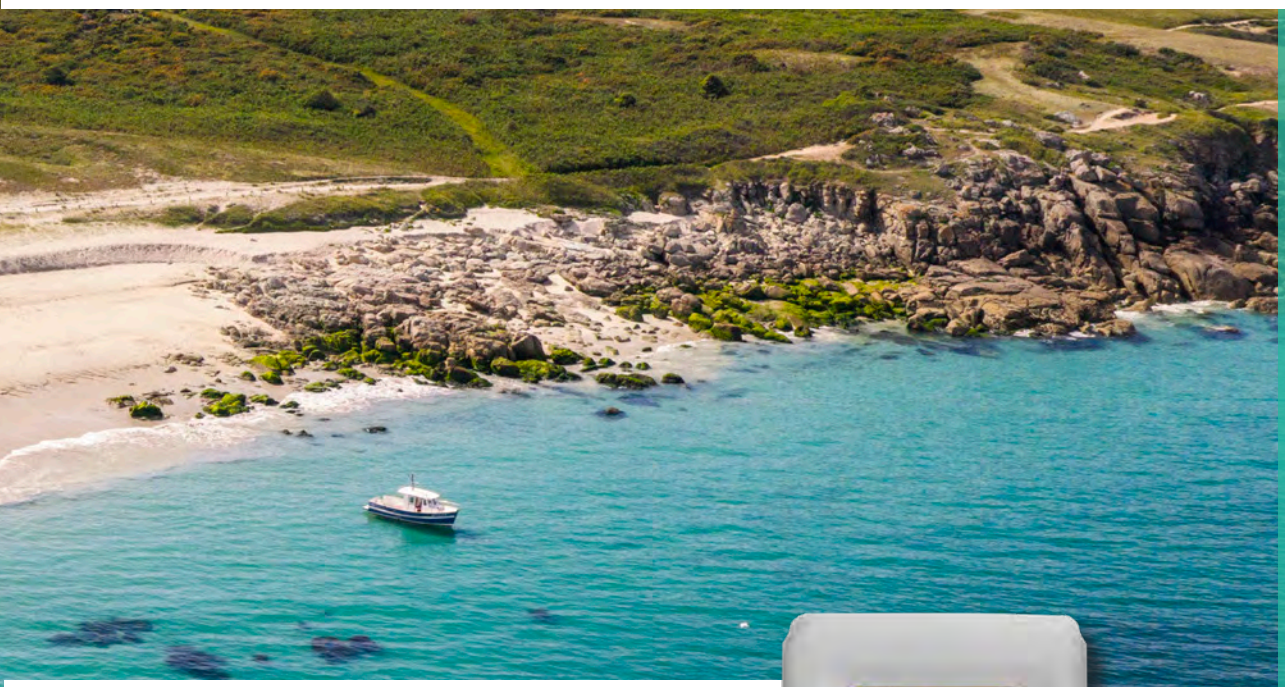

ISOPOWER+



Galvanic isolation

IP43 waterproof casing

Parallel connection

Quick & easy connection

Compact & lightweight

ISOPOWER+

Warranty 3 years

8.9/10 Repairability index



Presentation

In a 24 VDC installation, it is often necessary to use standard products operating on 12 VDC, lighting, professional communication equipment, etc. The **ISOPOWER+** meets this requirement by converting 24 VDC to 12 VDC while providing galvanic isolation between the input and output. As a result any disturbances on the input are not transmitted to the output.

A full range

The **ISOPOWER+** is available in 4 models, from **3 to 12 A**, with power ratings ranging from 36 to 144 W. Depending on the power consumption of your equipment, you can size your installation as accurately as possible.

Quick & easy connection

The **ISOPOWER+** is equipped with a quick-connect spring terminal block suitable for cable cross-sections up to 4 mm² (AWG 12). This technology does not require a screwdriver for cable connection and eliminates the need for annual tightening torque checks.

Easy to install

The **ISOPOWER+** can be easily installed using four M3 screws (not included).

IP43 waterproof casing

The **ISOPOWER+** is rated IP43 when installed with the terminal block facing downward. It has no ventilation openings, making it resistant to water droplets and dust.

Output voltage

The **ISOPOWER+** output voltage is factory-set to 13.8 V and can be adjusted from 11.5 V to 15 V using the potentiometer located next to the terminal block.

Parallel operation

ISOPOWER+ units can be connected in parallel to increase the output current. Up to 5 units can be connected in parallel.

No-Load Consumption

The **ISOPOWER+** has a very low no-load current consumption of less than 10 mA, which is lower than the battery's self-discharge rate. Therefore, there is no need to switch off the converter using a remote switch.



Ultra compact & lightweight

ISOLATED DC-DC CONVERTER-CHARGERS

3A
6A
9A
12A

Part number	IP24-12/3A	IP24-12/6A	IP24-12/9A	IP24-12/12A
Model	24V-12V/3A	24V-12V/6A	24V-12V/9A	24V-12V/12A
Input				
Voltage	17-32VDC			
Rated power at 30°C	36W	72W	108W	144W
Rated power at 55°C (linear derating)	18W	36W	54W	72W
Output				
Rated output voltage	13,8VDC			
Output voltage adjustment range	11,5V à 15V			
Output voltage tolerance	±0,2V			
Output noise	< 200 mVpp			
Output current at 30°C (86 °F)	3A	6A	9A	12A
Maximum intermittent current (1)	6A	9A	12A	18A
Maximum wiring section	4 mm^2 (AWG 12)			
Isolation	>500V DC between input, output and case			
Power conversion efficiency	87%	88%	85%	81%
Off load current (quiescent current)	< 10 mA			
Shock protection	Protected by internal input and output fuses			
Over heat protection	Limited by temperature sensing circuit			
Transients protection	Protected by filters and rugged components			
Over current protection	Limited by internal input and output fuses			
Environment				
Cooling	Natural (fanless)			
Sound level	0dB			
Operating T°	30°C (86°F)			
Storage T°	-25°C à +80°C (-13°F to 176°F)			
Relative humidity	95%			
Casing				
Material	Aluminium chassis / thermoplastic casing			
Dimensions (Height, Depth, Length)	60 x 89 x 117mm (2.36 x 3.5 x 4.6 in)			
Weight	0.2 Kg (0.44 lb)	0.35 Kg (0.77 lb)		0.45 Kg (0.99 lb)
Fixing hole spacing (wall-mounted)	100 x 82mm (3.94 x 3.23 in)			
Fixing screw (wall)	4 screws M4 - not supplied			
Ingress Protection	IP43 (terminal block at the bottom)			
Connections	4-way - spring clamping			
Standards				
CE declaration of conformity	On request			
CE/EMC	EN61204-3			
CE/Security	EN60335-1			
Automotive	ECE R10-5 (pending)			

(1) maximum current for 2 minutes followed by a rest period of 10 minutes

Avaibility Q1 2027



Photo : Megan Barber

DC-DC converter-chargers

DCPOWER+ up to 1800W



Silent

60°C

No derating

Bluetooth®

3 Li Lithium 6.941

Lithium ready

CAN BUS Interface

DCPOWER+

Warranty 3 years

8.9/10 Repairability index



Presentation

DCPOWER+ converter-chargers have been designed to charge a 12, 24, 36 or 48V battery bank from a 12, 24, 36 or 48V network. The most typical case of use is the 24V bow-thruster battery bank charge from the 12V on-board network (model DC12-24/30PL). They also allow a LiFePO4 battery to be recharged from a Lead battery connected to an alternator.

Thanks to their large scale of input and output voltage, they can be configured as a simple converter or as a battery charger.
In this case, the charging curve delivered is the same as the one of a smart charger :
- 5 steps
- all types of batteries

Silent operating

CRISTEC is the only manufacturer offering 1800W converter-chargers with natural convection (without fan). This advantage gives the **DCPOWER+** chargers a completely silent operation and an optimized lifespan. It is therefore possible to install them anywhere on board, including under a berth.

Low Energy Bluetooth®

The chargers are equipped with a Bluetooth® Low Energy , variant of "classic" Bluetooth® . The major advantage of Bluetooth® Low Energy is its low power consumption as it consumes half of a classic Bluetooth® .

No derating

Chargers have full charge up to +60°C (140°F) with no loss, resistant to harsh environments.

Ignition protected

They can be installed in the engine room thanks to **ISO8846/SAE J1171** compliance which protects against ignition of flammable gases.

D+ for land vehicles

The D+ feature allows you to start the DC-DC with the D+ signal of your alternator. In such way you are charging your additional battery only when the engine is running.

5-stage charging profile

- **Boost**: charges batteries to 80% of full charge
- **Absorption**: slowly completes remaining charge to 100%
- **Floating**: maintains battery charge
- **Automatic refresh**: prevents sulphation and revitalizes batteries, selectable by keypad pushbutton
- **Reboost**: new automatic Boost phase if DC consumers and the state of batteries so require.

Adaptative charging

DCPOWER+ chargers are compatible with all types of batteries:
- Opened classic lead
- Sealed, gel or AGM
- Spiral sealed
- Lithium Iron Phosphate (LiFePO4) with BMS
- Selection of your technology of battery is easy to do through the cover keypad.

Remote control

The chargers are fitted with CAN BUS and Bluetooth® interface .

Typical installation

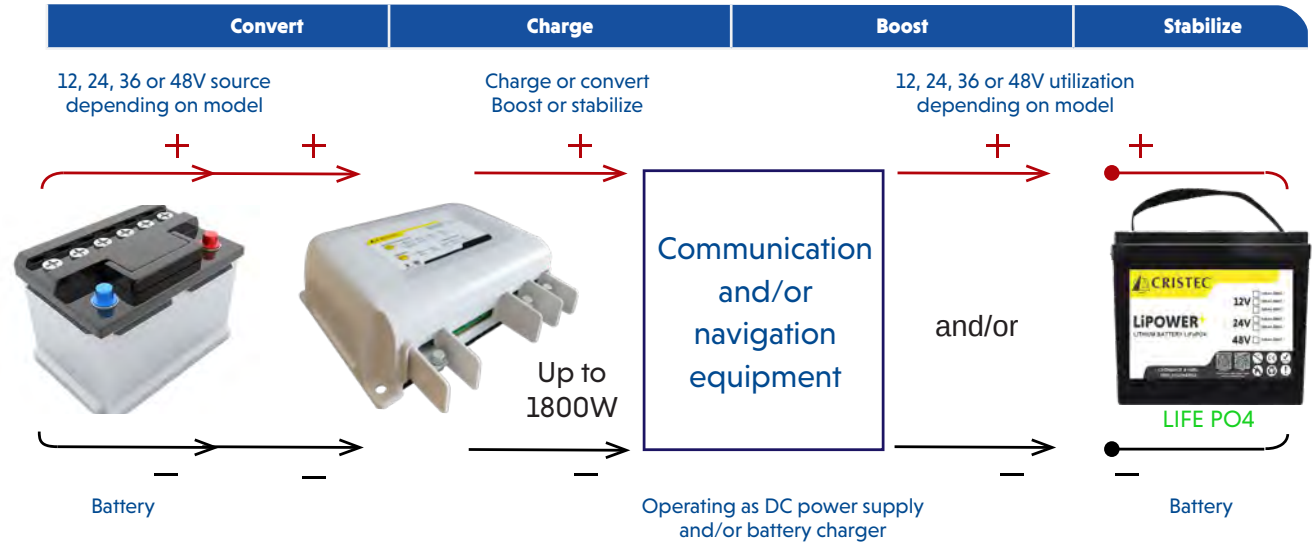

Parallel installation

Up to 4 units can be parallel-mounted using CAN BUS.
The major unit will be declared as LEADER and the other ones as FOLLOWER.

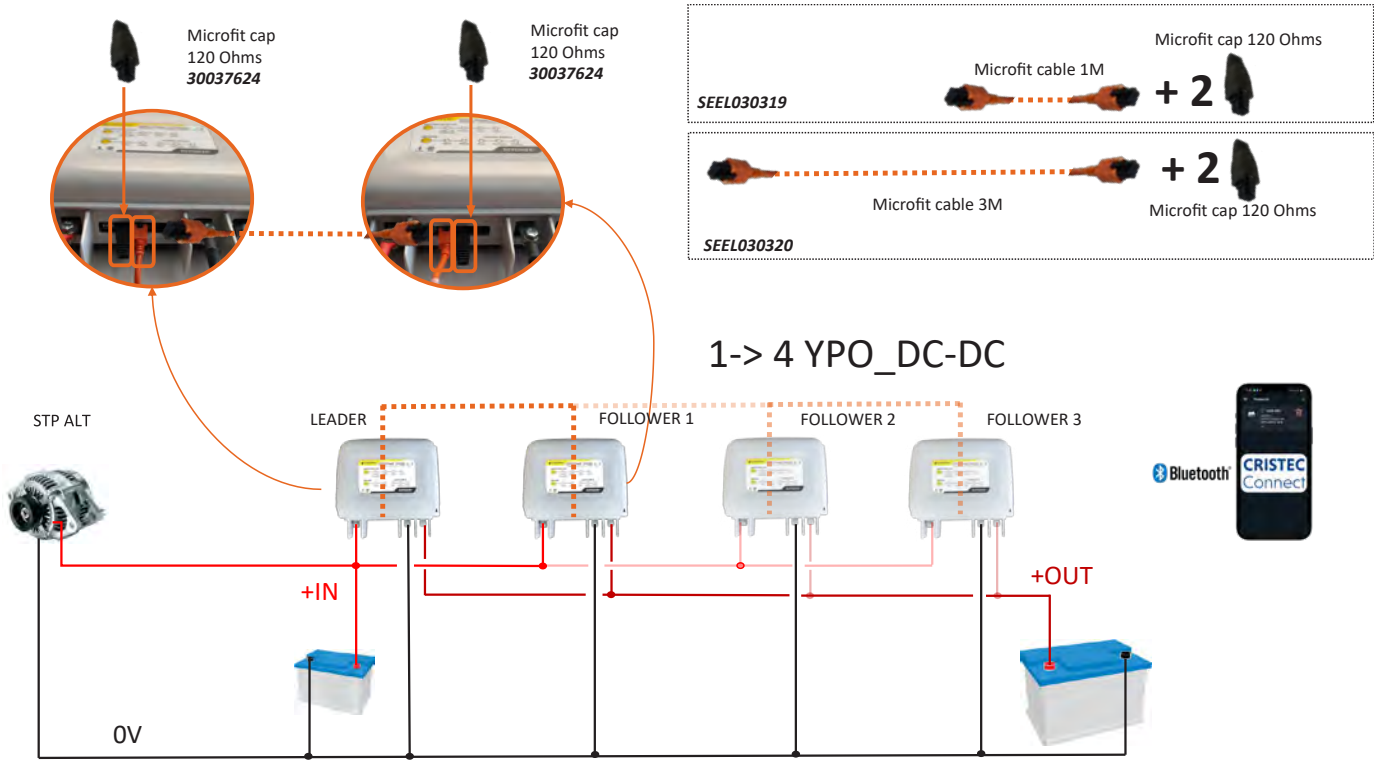

Flexible settings

Numerous settings are available such as output power limitation, input voltage starting threshold, maximum alternator probe temperature, etc.

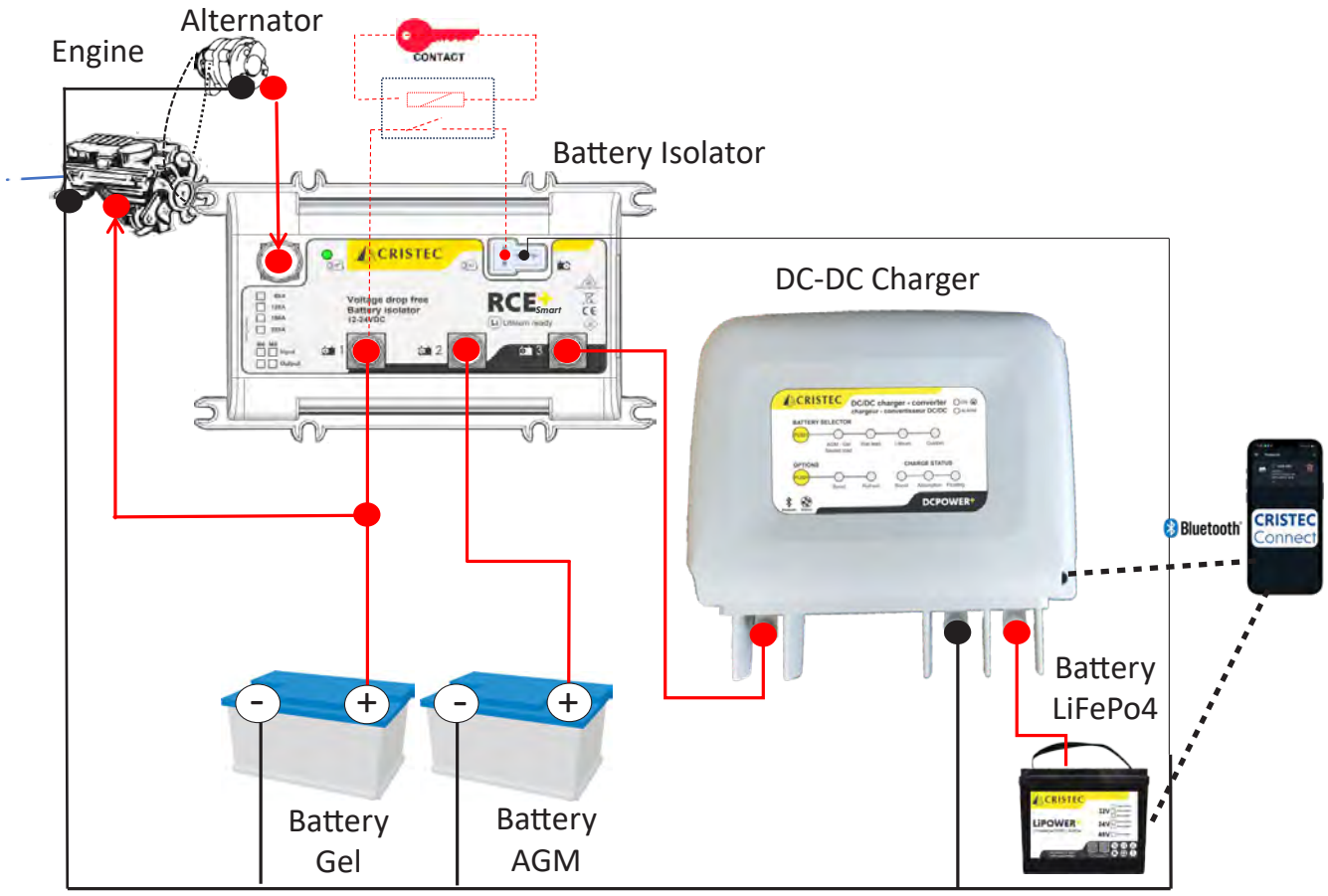

D+ installation

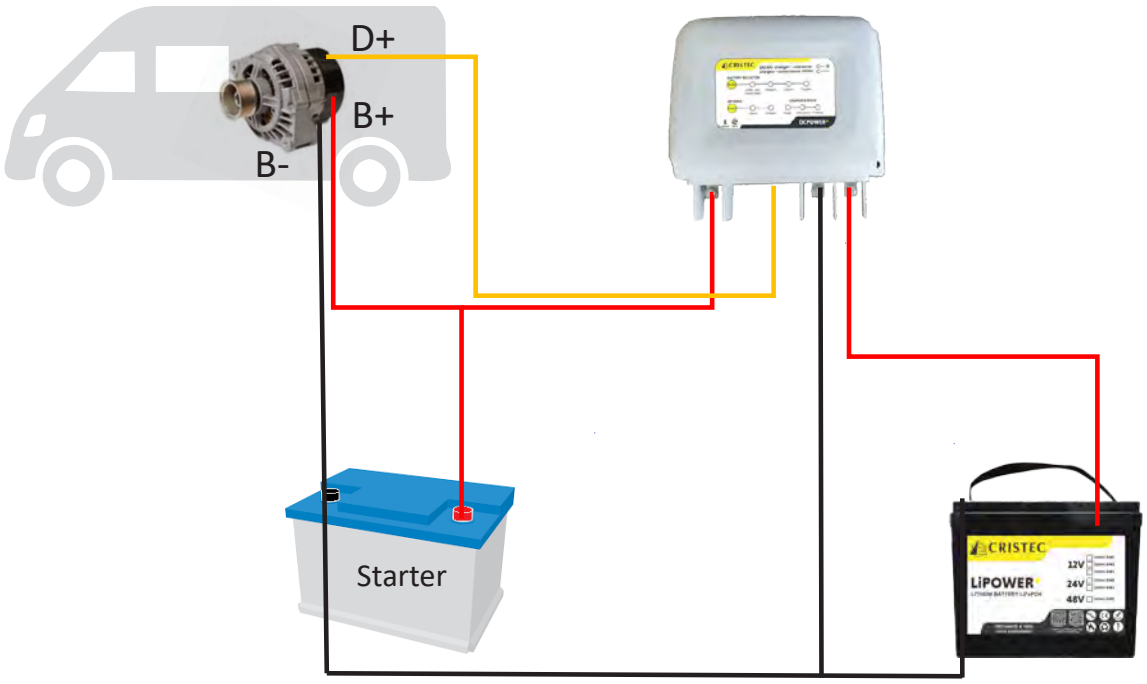

Choosing a charging curve

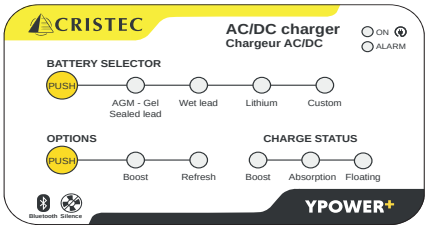

With the PUSH button of the BATTERY SELECTOR you can choose the battery technology and its associated charging curve. If you use the Bluetooth® application on your mobile phone or tablet and choose a different charging curve the CUSTOM led switches on.

When choosing any battery technology above, the BOOST charging curve from the OPTIONS menu is selected by default. When the PUSH button is pressed again, you select the **5-step charging curve** with BOOST and REFRESH as follows :

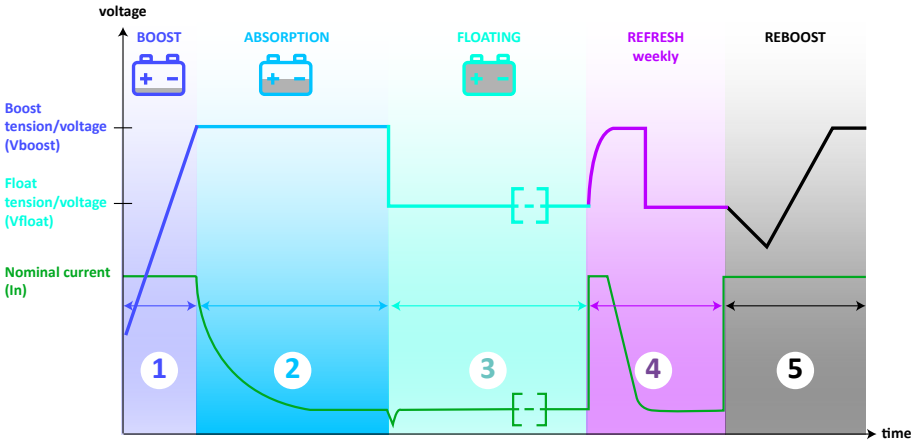

5-step charge curve IUoU with automatic weekly refresh

If no OPTIONS are selected (no green led is lit on the OPTIONS menu) the charging curve starts with the Float voltage.



DC-DC CONVERTER - CHARGERS DCPOWER+

12V





Part Number	DC12-12/60PL	DC12-24/30PL	DC12-36/15PL	DC12-48/10PL
Model	12-12V/60A	12-24V/30A	12-36V/15A	12-48V/10A
Recommended battery bank*	500-700Ah	200-400Ah	100-200Ah	80-120Ah
Input				
Voltage	10V -16V		10V -64V	
Maximum current	65A		45A	
Nominal Power	900W		675W	600W
Efficiency	96% typical			
Input fuses	3 x 25A /32V			
Output				
Number of battery banks	1			
Rated current	60A	30A	15A	10A
Charging curve	IU or IUoU through front keypad push-button or CAN BUS (Boost, Absorption, Floating and Refresh – factory setting)			
Battery type	Lead sealed as factory setting - Other choices through internal setting: gel, AGM, calcium lead, Lithium, stabilized power supply, etc.			
Boost voltage (default)	14.4VDC	28.8VDC	43,2VDC	57.6VDC
Floating voltage (default)	13.8VDC	27.6VDC	41,4VDC	52.2VDC
Regulation tolerance	< 2% (at rated conditions)			
Peak to peak ripple and noise	< 2% (at rated conditions)			
Automotive fuse	3 x 25A/32V	2 x 25A/32V	1 x 20A /80V	1 x 20A /80V
Environment				
Cooling	Natural (fanless)			
Sound level	0 dB			
Operating T°	From -20°C to +60°C (-4°F to 140°F), derating above 60°C (140°F). Above 65°C (149°F), current limitation			
Storage T°	From -20°C to +70°C (-4°F to 158°F)			
Relative humidity	up to 70% (95% without condensation)			
Bluetooth®	Low Energy Bluetooth® - Power: +9dBm (frequency: 2412-2484MHz)			
Casing				
Material	Aluminium sink frame / Thermoplastic body			
Dimensions (length, height, depth)	238 x 220 x 81mm (9.4 x 8.7 x 3.2 in)			
Weight	2kg (4.4 lb)			
Fixing center distance	219 x 155mm (8.6 x 6.1 in)			
Fixing screw (wall)	4 M5 round head screws - not supplied			
Ingress protection	IP22			
Electronic card protection	Water-repellent varnish (marine environment)			
Standards				
CE declaration of conformity	Available on request			
CE / EMC	EN61204-3			
CE / Security (renewal)	EN60335-2-29. E-marking E2*10R06/01*21068*00			
Protections				
	Polarity reversal, short-circuit, abnormal overheating			
Communication				
	CAN BUS (NMEA on option) / Bluetooth®			
Options				
Temperature probe ref: 2.8m: STP-UNI-2.8 or 5m: STP-UNI-5.0 / OTD probe (Over Temperature Device) / remote ON/OFF / + alternator STP-ALT-2.4 / Parallel mounting				
Remote control	G-ON/OFF-R-PL			

* Overall battery capacity recommended for lead-type batteries, C/10. For Lithium batteries, C/3, consult us if needed.

DC-DC CONVERTER - CHARGERS DCPOWER+

24V





Part Number	DC24-12/60PL	DC24-24/30PL	DC24-24/60PL	DC24-36/20PL	DC24-48/15PL
Model	24-12V/60A	24-24V/30A	24-24V/60A	24-36V/20A	24-48V/15A
Recommended battery bank*	500-700Ah	200-400Ah	500-700Ah	150-250Ah	100-200Ah
Input					
Voltage	20V -32V			20V -64V	
Maximum current	32A		65A	25A	32A
Nominal Power	900W		1800W	900W	
Efficiency	96% typical				
Input fuses	2 x 25A /32V		3 x 25A /32V	2 x 25A /80V	
Output					
Number of battery banks	1				
Rated current	60A	30A	60A	20A	15A
Charging curve	IU or IUoU through front keypad push-button or CAN BUS (Boost, Absorption, Floating and Refresh – factory setting)				
Battery type	Lead sealed as factory setting - Other choices through internal setting: gel, AGM, calcium lead, Lithium, stabilized power supply, etc.				
Boost voltage (default)	14.4VDC	28.8VDC		43,2VDC	57.6VDC
Floating voltage (default)	13.8VDC	27.6VDC		41,4VDC	52.2VDC
Regulation tolerance	< 2% (at rated conditions)				
Peak to peak ripple and noise	< 2% (at rated conditions)				
Automotive fuse	3 x 25A/32V	2 x 25A/32V	3 x 25A/32V	2 x 20A /80V	1 x 20A /80V
Environment					
Cooling	Natural (fanless)				
Sound level	0 dB				
Operating T°	From -20°C to +60°C (-4°F to 140°F), derating above 60°C (140°F). Above 65°C (149°F), current limitation				
Storage T°	From -20°C to +70°C (-4°F to 158°F)				
Relative humidity	up to 70% (95% without condensation)				
Bluetooth®	Low Energy Bluetooth® - Power: +9dBm (frequency: 2412-2484MHz)				
Casing					
Material	Aluminium sink frame / Thermoplastic body				
Dimensions (length, height, depth)	238 x 220 x 81mm (9.4 x 8.7 x 3.2 in)				
Weight	2kg (4.4 lb)				
Fixing center distance	219 x 155mm (8.6 x 6.1 in)				
Fixing screw (wall)	4 M5 round head screws - not supplied				
Ingress protection	IP22				
Electronic card protection	Water-repellent varnish (marine environment)				
Standards					
CE declaration of conformity	Available on request				
CE / EMC	EN61204-3				
CE / Security (renewal)	EN60335-2-29. E-marking E2*10R06/01*21068*00				
Protections					
	Polarity reversal, short-circuit, abnormal overheating				
Communication					
	CAN BUS (NMEA on option) / Bluetooth®				
Options					
	Temperature probe ref: 2.8m: STP-UNI-2.8 or 5m: STP-UNI-5.0 / OTD probe (Over Temperature Device) / remote ON/OFF / + alternator STP-ALT-2.4 / Parallel mounting				
Remote control	G-ON/OFF-R-PL				

* Overall battery capacity recommended for lead-type batteries, C/10. For Lithium batteries, C/3, consult us if needed.

DC-DC CONVERTER - CHARGERS DCPOWER+

36V



Part Number	DC36-12/40PL	DC36-24/30PL	DC36-36/20PL	DC36-36/40PL	DC36-48/15PL
Model	36-12V/40A	36-24V/30A	36-36V/20A	36-36V/40A	36-48V/15A
Recommended battery bank*	300-500Ah	200-400Ah	150-250Ah	300-500Ah	100-200Ah
Input					
Voltage	30V -48V		30V -64V		
Maximum current	20A	25A		50A	25A
Nominal Power	600W	900W		1800W	900W
Efficiency	96% typical				
Input fuses	2 x 20A /80V			3 x 20A /80V	2 x 20A /80V
Output					
Number of battery banks	1				
Rated current	40A	30A	20A	40A	15A
Charging curve	IU or IUoU through front keypad push-button or CAN BUS (Boost, Absorption, Floating and Refresh – factory setting)				
Battery type	Lead sealed as factory setting - Other choices through internal setting: gel, AGM, calcium lead, Lithium, stabilized power supply, etc.				
Boost voltage (default)	14.4VDC	28.8VDC	43,2VDC		57.6VDC
Floating voltage (default)	13.8VDC	27.6VDC	41,4VDC		52.2VDC
Regulation tolerance	< 2% (at rated conditions)				
Peak to peak ripple and noise	< 2% (at rated conditions)				
Automotive fuse	2 x 25A /32V		2 x 20A /32V	3 x 20A /80V	1 x 20A /80V
Environment					
Cooling	Natural (fanless)				
Sound level	0 dB				
Operating T°	From -20°C to +60°C (-4°F to 140°F), derating above 60°C (140°F). Above 65°C (149°F), current limitation				
Storage T°	From -20°C to +70°C (-4°F to 158°F)				
Relative humidity	up to 70% (95% without condensation)				
Bluetooth®	Low Energy Bluetooth® - Power: +9dBm (frequency: 2412-2484MHz)				
Casing					
Material	Aluminium sink frame / Thermoplastic body				
Dimensions (length, height, depth)	238 x 220 x 81mm (9.4 x 8.7 x 3.2 in)				
Weight	2kg (4.4 lb)				
Fixing center distance	219 x 155mm (8.6 x 6.1 in)				
Fixing screw (wall)	4 M5 round head screws - not supplied				
Ingress protection	IP22				
Electronic card protection	Water-repellent varnish (marine environment)				
Standards					
CE declaration of conformity	Available on request				
CE / EMC	EN61204-3				
CE / Security (renewal)	EN60335-2-29. E-marking E2*10R06/01*21068*00				
Protections					
	Polarity reversal, short-circuit, abnormal overheating				
Communication					
	CAN BUS (NMEA on option) / Bluetooth®				
Options					
	Temperature probe ref: 2.8m: STP-UNI-2.8 or 5m: STP-UNI-5.0 / OTD probe (Over Temperature Device) / remote ON/OFF / + alternator STP-ALT-2.4 / Parallel mounting				
Remote control	G-ON/OFF-R-PL				

* Overall battery capacity recommended for lead-type batteries, C/10. For Lithium batteries, C/3, consult us if needed.

DC-DC CONVERTER - CHARGERS DCPOWER+

48V



Part Number	DC48-12/40PL	DC48-24/30PL	DC48-36/20PL	DC48-48/15PL	DC48-48/30PL
Model	48-12V/40A	48-24V/30A	48-36V/20A	48-48V/15A	48-48V/30A
Recommended battery bank*	300-500Ah	200-400Ah	150-250Ah	100-200Ah	200-400Ah
Input					
Voltage	40V-64V				
Maximum current	15A	20A			30A
Nominal Power	600W	900W		800W	1800W
Efficiency	96% typical				
Input fuses	1 x 20A /80V			2 x 20A /80V	
Output					
Number of battery banks	1				
Rated current	40A	30A	20A	15A	30A
Charging curve	IU or IUoU through front keypad push-button or CAN BUS (Boost, Absorption, Floating and Refresh – factory setting)				
Battery type	Lead sealed as factory setting - Other choices through internal setting: gel, AGM, calcium lead, Lithium, stabilized power supply, etc.				
Boost voltage (default)	14.4VDC	28.8VDC	43,2VDC	57.6VDC	
Floating voltage (default)	13.8VDC	27.6VDC	41,4VDC	52.2VDC	
Regulation tolerance	< 2% (at rated conditions)				
Peak to peak ripple and noise	< 2% (at rated conditions)				
Automotive fuse	2 x 25A /32V		2x20A/80V	1x20A/80V	2x20A/80A
Environment					
Cooling	Natural (fanless)				
Sound level	0 dB				
Operating T°	From -20°C to +60°C (-4°F to 140°F), derating above 60°C (140°F). Above 65°C (149°F), current limitation				
Storage T°	From -20°C to +70°C (-4°F to 158°F)				
Relative humidity	up to 70% (95% without condensation)				
Bluetooth®	Low Energy Bluetooth® - Power: +9dBm (frequency: 2412-2484MHz)				
Casing					
Material	Aluminium sink frame / Thermoplastic body				
Dimensions (length, height, depth)	238 x 220 x 81mm (9.4 x 8.7 x 3.2 in)				
Weight	2kg (4.4 lb)				
Fixing center distance	219 x 155mm (8.6 x 6.1 in)				
Fixing screw (wall)	4 M5 round head screws - not supplied				
Ingress protection	IP22				
Electronic card protection	Water-repellent varnish (marine environment)				
Standards					
CE declaration of conformity	Available on request				
CE / EMC	EN61204-3				
CE / Security (renewal)	EN60335-2-29. E-marking E2*10R06/01*21068*00				
Protections					
	Polarity reversal, short-circuit, abnormal overheating				
Communication					
	CAN BUS (NMEA on option) / Bluetooth®				
Options					
Temperature probe ref: 2.8m: STP-UNI-2.8 or 5m: STP-UNI-5.0 / OTD probe (Over Temperature Device) / remote ON/OFF / + alternator STP-ALT-2.4 / Parallel mounting					
Remote control	G-ON/OFF-R-PL				

* Overall battery capacity recommended for lead-type batteries, C/10. For Lithium batteries, C/3, consult us if needed.



AC-DC battery chargers

YPOWER+



Certified YPOWER+



IP65 YPOWER+



HPOWER

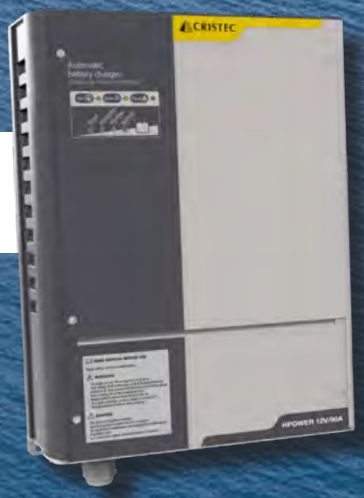

Certified HPOWER



Silent

Up to 4 outputs

Bluetooth®

>60°C
No derating

Lithium ready

CAN BUS interface

Plug & Play

YPOWER+

Warranty 3 years

8.9/10 Repairability index



Silent operating

CRISTEC is the only manufacturer offering chargers up to 12V 70A with natural convection (without fan). This advantage gives the **YPOWER+** chargers a completely silent operation and an optimized lifespan. It is therefore possible to install them anywhere on board, including under a berth.

3 or 4 independent banks depending on models

The **YPOWER+** chargers are the only chargers which have up to 4 independent and non-limited outputs.

Low Energy Bluetooth®

The **YPOWER+** chargers are equipped with a Bluetooth® Low Energy , variant of "classic" Bluetooth® . The major advantage of Bluetooth® Low Energy is its low power consumption as it consumes half the power of a classic Bluetooth® .

No derating

Chargers have full charge up to +40°C or +60°C (140°F) with no loss, depending on the model.

Ignition protected

All models can be installed in the engine room thanks to **ISO8846/SAE J1171** compliance which protects against ignition of flammable gases.

Worldwide use

Automatic detection of the power supply network, from 90 to 265VAC and from 47 to 65Hz. You do not have to care about the AC power grid or genset voltage.

ABYC compliant A-31 for US requirement.

5-stage charging profile

- **Boost**: charges batteries to 80% of full charge
- **Absorption**: slowly completes remaining charge to 100%
- **Floating**: maintains battery charge
- **Automatic refresh**: prevents sulphation and revitalizes batteries, selectable by keypad pushbutton
- **Reboost**: new automatic Boost phase if DC consumers and the state of batteries so require.

A regulated DC power-supply mode is also available : YPOWER+ chargers can be used as high-voltage DC-DC converters with input ranging from 121 to 375VDC.

Easy connection

Plug & Play connection, secure, simple and fast without opening the charger. AC and DC connectors are included.

Adaptative charging

Custom-made and simultaneous recharge of 3 or 4 battery banks.
YPOWER+ chargers can be connected to various types of batteries simultaneously:
- Opened classic lead
- Sealed, gel or AGM
- Spiral sealed
- Lithium Iron Phosphate (LiFePO4) with BMS.

Selection of your technology of battery is easy thanks to the front keypad.

Remote control

The chargers are fitted with a CAN BUS and a Bluetooth® interface as standard.
Connection to an NMEA network is also available through an optional adaptor, refer to charger's options page (PN: 001600).

YPOWER+ CERTIFIED

BUREAU VERITAS 1828

Warranty 3 years

8.9/10 Repairability index

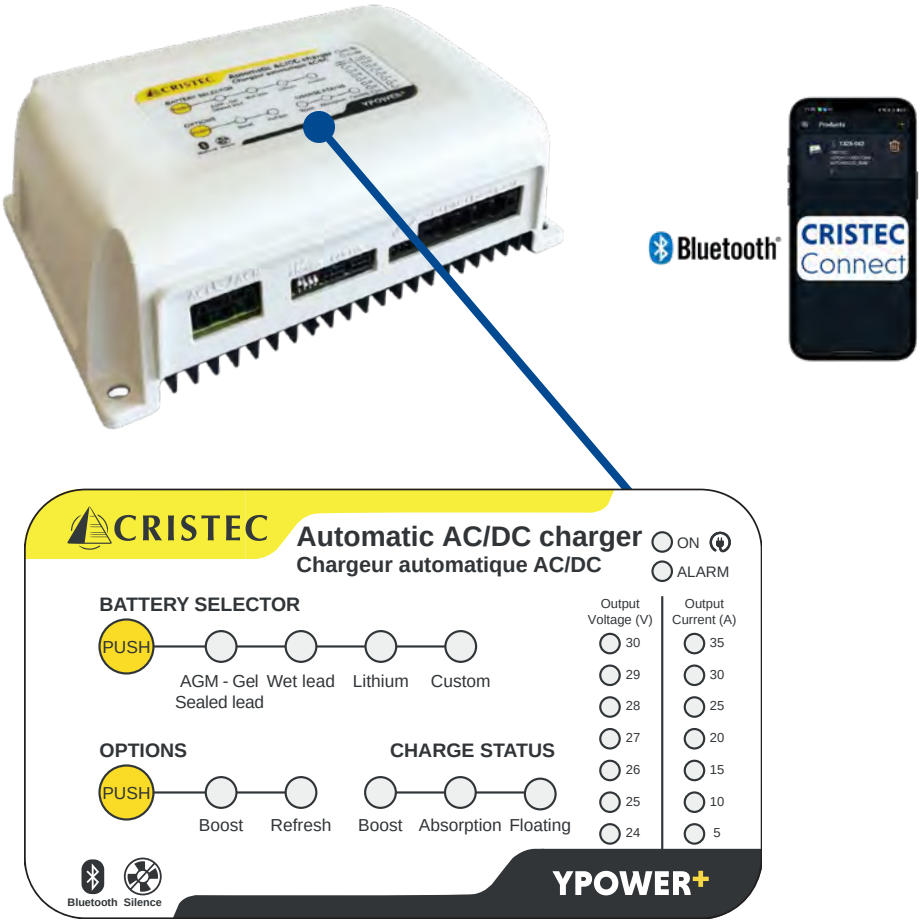

Presentation

The front panel with an incorporated LED bar graph displays the current and voltage output supplied by the charger in real time.
This allows you to check the status of your charger at any time without needing an external device.
The NO/NC relay sends a warning to an external system in the event of a charger malfunction or low battery voltage.
The relay is acomplement of the LED default LED on the Lexan panel, which indicates the type of error based on the sequence of lights.
The YPOWER+ certified chargers are available in 24V/25A & 24V/35A.

Available Q1 2027

Choosing a charging curve

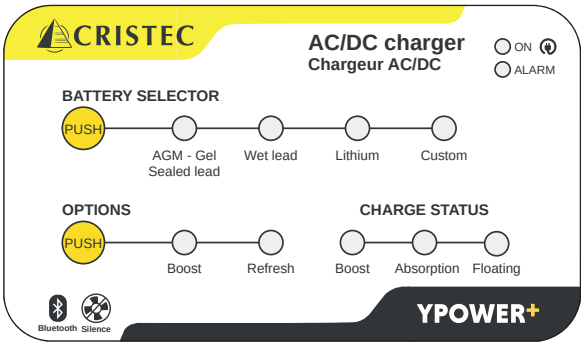

With the PUSH button of the BATTERY SELECTOR you can choose the battery technology and its associated charging curve. If you use the Bluetooth® application on your mobile phone or tablet and choose a different charging curve the CUSTOM led switches on.

When choosing any battery technology above, the BOOST charging curve from the OPTIONS menu is selected by default. When the PUSH button is pressed again, you select the **5-step charging curve** with BOOST and REFRESH as follows :

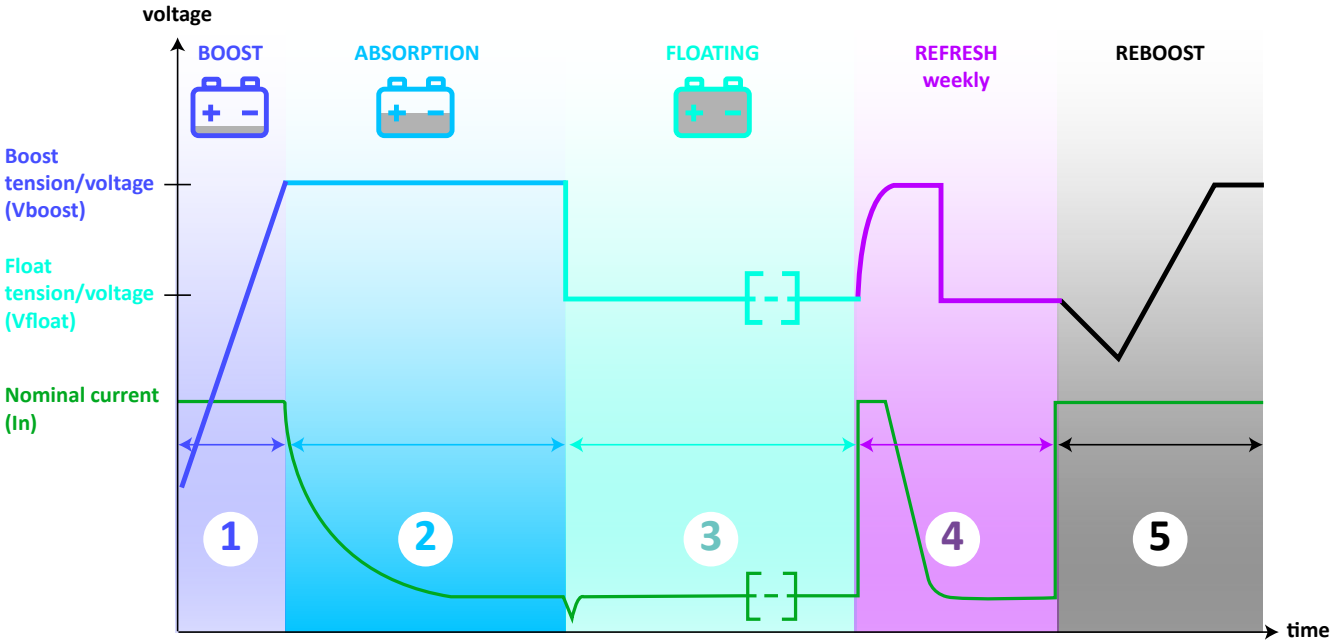

5-step charge curve IUoU with automatic weekly refresh

If no OPTIONS are selected (no green led is lit on the OPTIONS menu) the charging curve starts with the Float voltage.

Typical installation

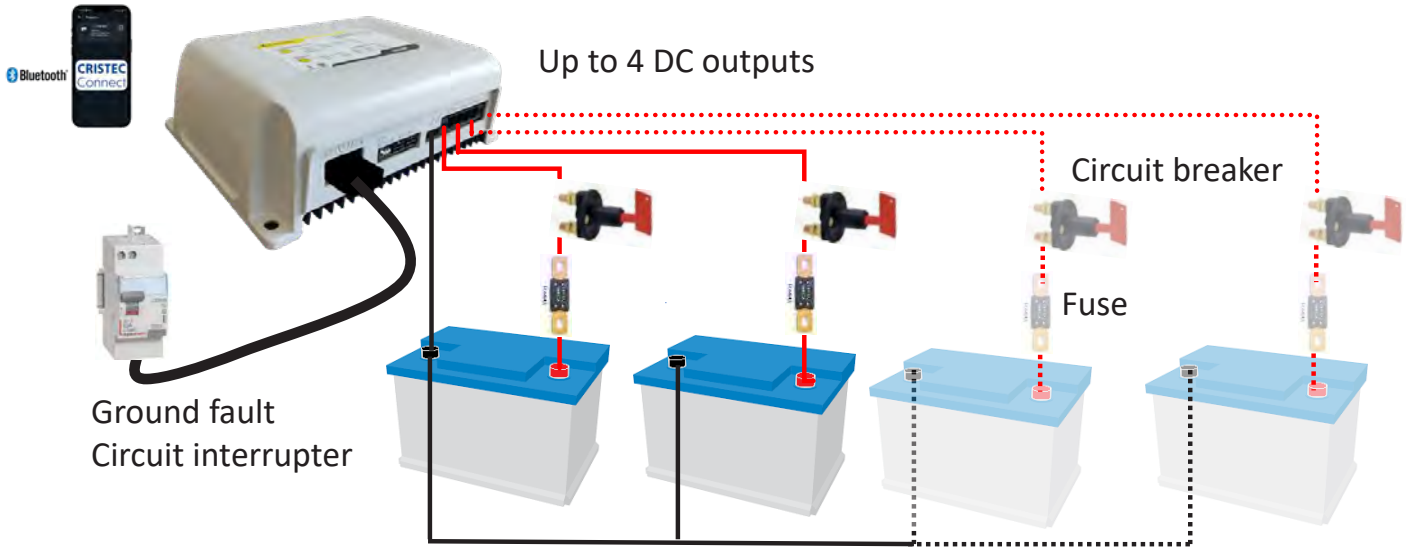



CRISTEC Connect

"Monitor and manage your battery charge status in real time via Bluetooth®"



Download on the App Store

GET IT ON Google Play

Bluetooth®

Presentation

The **CRISTEC Connect** mobile application allows users to remotely monitor, control and set up CRISTEC devices via **Bluetooth®** connection directly from a smart phone or tablet. It provides intuitive, real-time insights into your on-board power system while offering full control over charging settings.

Key Features

Real-time Monitoring :

- Display of output current and battery voltages across multiple banks (starter, service, bow thruster, etc.).
- Live status of the current charging phase (Boost, Absorption, Floating, Refresh, etc.).
- Temperature readout (with optional sensor connected).
- AC input voltage and frequency monitoring.
- Alarms notifications

Charger Control & Custom Settings (PIN Code Secured) :

- Remote ON / OFF control.
- Output current limitation.
- Resettable Amp-hour (Ah) counter.
- Charge curve selection based on battery technolgy (Lead, Lithium, etc.).
- Toggle Boost and Refresh modes.
- Custom Mode: tailored adjustment of charge parameters (durations, Boost/Float voltages, current thresholds)

Integrated Tools & Accessibility :

- Barcode / Serial Number Scanner: quick camera scan to immediately access online user manuals and product pages.
- Multi-language support: available in 5 languages (French, English, German, Italian, Spanish).
- Demo Mode and customizable temperature units (°C / °F).

Charger control



Charging curve



Voltage & current monitoring



Example of a complete installation

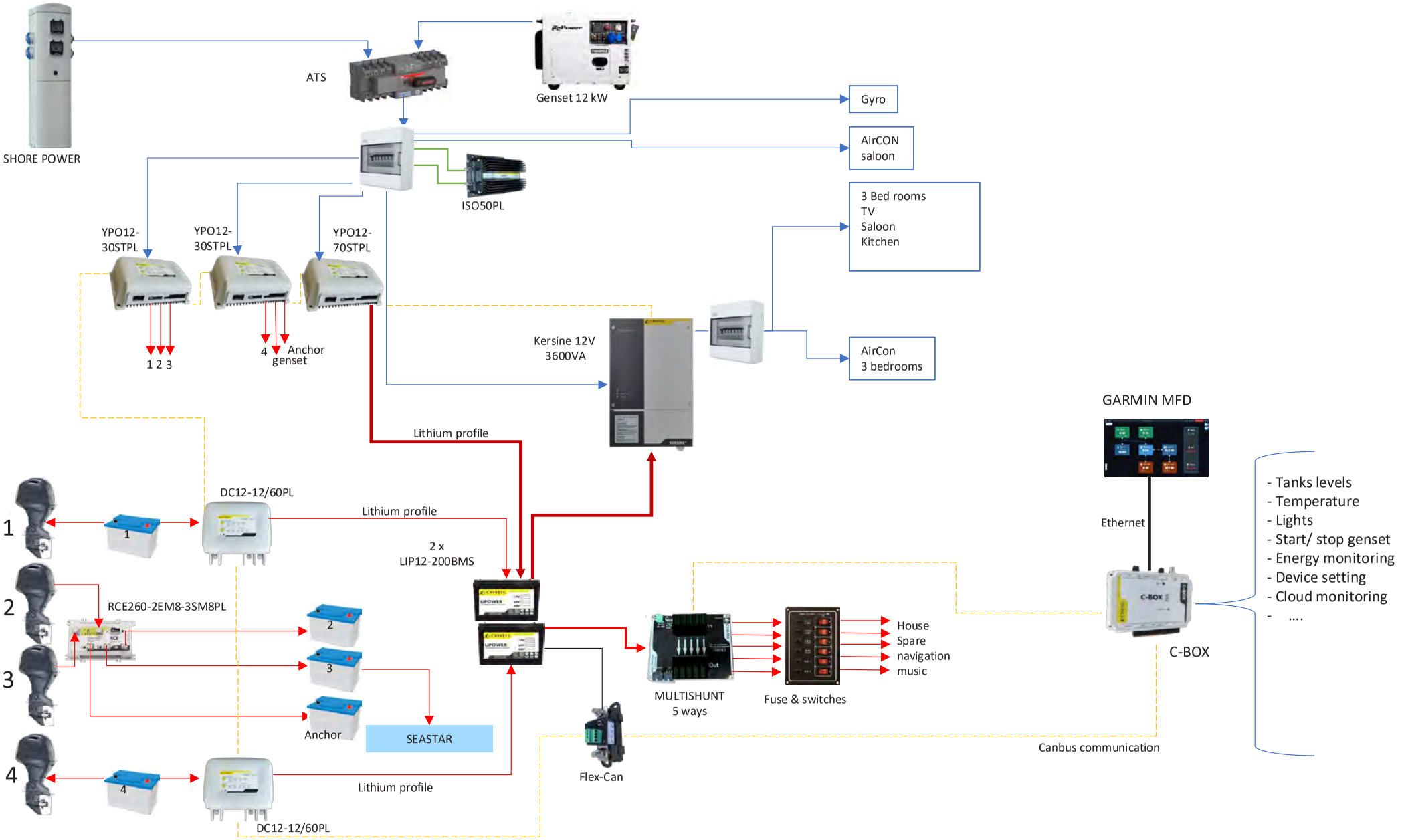

AC-DC BATTERY CHARGERS YPOWER+

12V







Part Number*	YPO12-20STPL	YPO12-30STPL	YPO12-50STPL	YPO12-70STPL
Model	12V/20A	12V/30A	12V/50A	12V/70A
Recommended lead-type battery bank	100-200Ah	200-300Ah	300-500Ah	500-700Ah
Recommended Lithium batteries (LiPOWER+)	LIP12-100-BMS		LIP12-200-BMS	
Input				
AC Voltage	From 90 to 265VAC single-phase automatic			
DC Voltage	From 121 to 375VDC			
Frequency	From 47 to 65Hz automatic			
Current consumed 230/115VAC	1.3/2.6A	2/4A	3.4/6.7A	4.4/8.7A
Recommended power for a generator	450W	650W	1100W	1500W
Power factor	1			
Efficiency	92.8% in 230VAC & 91% in 115VAC			
Input fuse	T6.3A/250V		T15A/250V	
Output				
Number of battery banks	3 separate positive terminals: +BAT E, +BAT 1 and +BAT 2 (integrated MOSFET splitter) 1 negative terminal : -BAT Each bank can be used individually and delivers the rated current		4 separate positive terminals : +BAT E, +BAT 1, +BAT 2 and +BAT 3 (integrated MOSFET splitter) 1 negative terminal : -BAT Each bank can be used individually and delivers the rated current	
Nominal current (+/-7%) @ rated power	20A/276W	30A/414W	50A/690W	70A/966W
Charging curve	Charging curve selection by push-button, Bluetooth® or CAN BUS (Boost, Absorption, Floating and Refresh)			
Battery type	Sealed lead, Gel, AGM as factory setting - calcium lead, LiFePO4, DC power-supply mode, etc. Specific request on demand			
Boost voltage for sealed lead battery (factory setting)	14.4VDC			
Floating voltage for sealed lead battery (factory setting)	13.8VDC			
Peak to peak ripple and noise	< 2% (at rated conditions)			
Automotive fuses mounted in series in minus pole -BAT	1 x 30A/32V	2 x 30A/32V	3 x 30A/32V	4 x 30A/32V
Environment				
Cooling	Natural (fanless)			
Sound level	0 dB			
Operating T° at 230VAC	From -20°C to +60°C (-4°F to +140°F)			
Derating (rated charge)	from 40°C (104°F)		from 60°C (140°F)	from 40°C (104°F)
Performance at 60°C (140°F)	16A (230VAC)	25A (230VAC)	40A (230VAC)	60A (230VAC)
Storage T°	From -20°C to +70°C (-4°F to +158°F)			
Relative humidity	up to 70% (95% without condensation)			
Bluetooth®	Low Energy Bluetooth® - Power: +9dBm (frequency: 2412-2484MHz)			
Casing				
Material	Aluminium sink frame and clasp / Thermoplastic body			
Dimensions (length, height, depth)	238 x 181 x 81mm (9.4 x 7.1 x 3.2 in)		289 x 197 x 105mm (11.4 x 7.8 x 4.1 in)	
Weight	2kg (4.4 lb)		3.5kg (6.6 lb)	3.7kg (6.7 lb)
Fixing center distance	219 x 155mm (8.6 x 6.1 in)		272 x 170mm (10.7 x 6.7 in)	
Fixing screw (wall)	4 M5 round head screws - not supplied			
Ingress protection	IP34 (electronic) & IP22 (connections)			
Electronic card protection	Sealed casing		Water-repellent varnish (marine environment)	
Standards				
CE declaration of conformity	Available on request			
CE / EMC	EN61204-3			
CE / Security	EN60335-2-29, ISO8846/SAE J1171 - ignition protected			
ABYC	A-31			
Protections				
Against transient input overvoltage by varistor (Not covered by warranty) / Against output polarity reversal by removable fuses / Against short-circuits and output overloads / Against abnormal overheating				
Communication				
			CAN BUS (NMEA on option) / Bluetooth®	
Options				
			Temperature probe & OTD probe (Over Temperature Device) ref: 2.8m: STP-UNI-2.8 / 5m: STP-UNI-5.0, remote control G-ON/OFF-R-PL	

*AC and DC connectors included for item codes containing «ST» = STandard (except item codes containing «OE» – Original Equipment)

AC-DC BATTERY CHARGERS YPOWER+

24V





Availability Q1 2027
model YPO24-12STPL in stock





Availability Q1 2027

Part Number*		YPO24-15STPL	YPO24-25STPL	YPO24-35STPL
Part Number*		-	YPO24-25-CERT	YPO24-35-CERT
Model		24V/15A	24V-25A	24V-35A
Recommended lead-type battery bank		100-200Ah	200-300Ah	300-500Ah
Recommended Lithium batteries (LiPOWER+)		LIP24-100-BMS		LIP24-200-BMS
Input				
AC Voltage		From 90 to 265VAC single-phase automatic		
DC Voltage		From 121 to 375VDC		
Frequency		From 47 to 65Hz automatic		
Current consumed 230/115VAC		2/4A	2.7/5.6A	4,4/8,7A
Recommended power for a generator		650W	1100W	1500W
Power factor		1		
Efficiency		92.8% in 230VAC & 91% in 115VAC		
Input fuse		T6.3A/250V	T15A/250V	
Output				
Number of battery banks	**STPL**	3 (including one for the engine battery) : +BAT E, +BAT 1 et +BAT 2	4 (including one for the engine battery) : +BAT E, +BAT 1 & +BAT 2 +BAT3	
	CERT	-	2 (including one for the engine battery) : +BAT E & +BAT 1 (integrated MOSFET splitter). Each bank can be used individually and deliver the rated current	
Nominal current (+/-7%) @ rated power		15A/414W	25A/690W	35A/966W
Charging curve		IU or IUoU through internal dip switches (Boost, Absorption and Floating – factory setting) - Selectable automatic Refresh		
Battery type		Sealed lead as factory setting - Gel, AGM, calcium lead, LiFePO4, DC power-supply mode, etc. Specific request on demand		
Boost voltage for sealed lead battery (factory setting)		28.8VDC		
Floating voltage for sealed lead battery (factory setting)		27.6VDC		
Peak to peak ripple and noise		< 2% (at rated conditions)		
Automotive fuses mounted in series in minus pole -BAT		1 x 30A/32V	3 x 30A/32V	3 x 30A/32V
Environment				
Cooling		Natural (fanless)		
Sound level		0 dB		
Operating T° at 230VAC		From -20°C to +60°C (-4°F to +140°F)		
Derating		from 40°C (104°F)	from 60°C (140°F)	
Performance at 60°C (140°F)		12A (230VAC)	20A (230VAC)	30A (230VAC)
Storage T°		From -20°C to +70°C (-4°F to +158°F)		
Relative humidity		up to 70% (95% without condensation)		
Casing				
Material		Casing comprises 3 parts : Aluminium sink frame / Thermoplastic body / Aluminium clasp		
Dimensions (length, height, depth)		238 x 181 x 81mm (9.4 x 7.1 x 3.2 in)	289 x 197 x 105mm (11.4 x 7.8 x 4.1 in)	
Weight		2kg (4.4 lb)	3.7kg (6.7 lb)	
Fixing center distance		219 x 155mm (8.6 x 6.1 in)	272 x 170mm (10.7 x 6.7 in)	
Fixing screw (wall)		4 M5 round head screws - not supplied		
Ingress protection		IP34 (electronic) & IP22 (connections)		
Standards				
CE / EMC		EN61204-3		
CE / Security		EN60335-2-29 - ISO8846/SAE J1171 - ignition protected		
ABYC		A-31		
Protections				
Against transient input overvoltage by varistor (Not covered by warranty) / Against output polarity reversal by fuses / Against short-circuits and output overloads / Against abnormal overheating				
Communication				
			CAN BUS (NMEA on option) / Bluetooth®	
Options				
			Temperature probe & OTD probe (Over Temperature Device) ref: 2.8m: STP-UNI-2.8 / 5m: STP-UNI-5.0, remote control G-ON/OFF-R-PL	

* AC and DC connectors included for item codes containing «ST» = STandard (except item codes containing «OE» – Original Equipment)

AC-DC BATTERY CHARGERS YPOWER+

36V
48V





Part Number*	YPO36-20STPL	YPO48-15STPL
Model	36V/20A	48V-15A
Recommended lead-type battery bank	100-200Ah	
Recommended Lithium batteries (LiPOWER+)	LIP36-100-BMS	LIP48-100-BMS
Input		
AC Voltage	From 90 to 265VAC single-phase automatic	
DC Voltage	From 121 to 375VDC	
Frequency	From 47 to 65Hz automatic	
Current consumed 230/115VAC	4,4/8,7A	
Recommended power for a generator	1200W	
Power factor	1	
Efficiency	92.8% in 230VAC & 91% in 115VAC	
Input fuse	T15A/250V	
Output		
Number of battery banks	4 (including one for the engine battery) : +BAT E, +BAT 1 et +BAT 2 (integrated MOSFET splitter) +BAT3 Each bank can be used individually and deliver the rated current	
Nominal current (+/-7%) @ rated power	900V	
Charging curve	IU or IUoU through internal dip switches (Boost, Absorption and Floating – factory setting) - Selectable automatic Refresh	
Battery type	Sealed lead as factory setting - Gel, AGM, calcium lead, LiFePO4, DC power-supply mode, etc. Specific request on demand	
Boost voltage for sealed lead battery (factory setting)	43,2VDC	57,6VDC
Floating voltage for sealed lead battery (factory setting)	41,1VDC	55,2VDC
Peak to peak ripple and noise	< 2% (at rated conditions)	
Automotive fuses mounted in series in minus pole -BAT	1 x 30A/80V	
Environment		
Cooling	Natural (fanless)	
Sound level	0 dB	
Operating T° at 230VAC	From -20°C to +60°C (-4°F to +140°F)	
Derating	from 40°C (104°F)	
Performance at 60°C (140°F)	15A (230VAC)	12A (230VAC)
Storage T°	From -20°C to +70°C (-4°F to +158°F)	
Relative humidity	up to 70% (95% without condensation)	
Casing		
Material	Casing comprises 3 parts : Aluminium sink frame / Thermoplastic body / Aluminium clasp	
Dimensions (length, height, depth)	289 x 197 x 105mm (11.4 x 7.8 x 4.1 in)	
Weight	3.7kg (6.7 lb)	
Fixing center distance	272 x 170mm (10.7 x 6.7 in)	
Fixing screw (wall)	4 M5 round head screws - not supplied	
Protection factor	IP34 (electronic) & IP22 (connections)	
Standards		
CE / EMC	EN61204-3	
CE / Security	EN60335-2-29 - ISO8846/SAE J1171 - ignition protected	
ABYC	A-31	
Protections		
Against transient input overvoltage by varistor (Not covered by warranty) / Against output polarity reversal by fuses / Against short-circuits and output overloads / Against abnormal overheating		
Communication		
CAN BUS (NMEA on option) / Bluetooth®		
Options		
Temperature probe & OTD probe (Over Temperature Device) ref: 2.8m: STP-UNI-2.8 / 5m: STP-UNI-5.0, remote control G-ON/OFF-R-PL		

* AC and DC connectors included for item codes containing «ST» = STandard (except item codes containing «OE» – Original Equipment)

IP65 POWER+

Warranty 3 years

8.9/10 Repairability index



Silent operating

CRISTEC is the only manufacturer offering 12V 70A chargers with natural convection (without fan) and waterproof. This advantage gives the YPOWER+ chargers a completely silent operation and an optimized lifespan. It is therefore possible to install them anywhere on board, including severe environment.

2 or 3 independent banks

The YPOWER+ chargers have 2 or 3 independent battery banks.

Low Energy Bluetooth®

YPOWER+ chargers are equipped with a Bluetooth® Low Energy , variant of "classic" Bluetooth® . The major advantage of Bluetooth® Low Energy is its low power consumption as it consumes half of a classic Bluetooth® .

No derating

Chargers have full charge up to +40°C

Ignition protected

They can be installed in the engine room thanks to **ISO8846/SAE J1171** compliance which protects against ignition of flammable gases.

Worldwide use

Automatic detection of power supply network, from 90 to 265VAC and from 47 to 65Hz. You do not have to care about AC grid voltage.

ABYC compliant A-31 for US requirement.

5-stage charging profile

- **Boost**: charges batteries to 80% of full charge
- **Absorption**: slowly completes remaining charge to 100%
- **Floating**: maintains battery charge
- **Automatic refresh**: prevents sulphation and revitalizes batteries, selectable by internal pushbutton
- **Reboost**: new automatic Boost phase if DC consumers and the state of batteries so require.

A regulated DC power-supply mode is also available : IP65 POWER+ chargers can be used as high-voltage DC-DC converters with input ranging from 121 to 375VDC.

Adaptative charging

Custom-made and simultaneous recharge of 3 independant battery banks.
YPOWER+ chargers can be used with various types of batteries simultaneously:
- Opened classic lead
- Sealed, gel or AGM
- Spiral sealed

Lithium Iron Phosphate (LiFePO4) with BMS
Selection of your technology of battery thanks to the front keypad.

IP65 waterproof

IP65 POWER+ can be installed in an outboard boat console.

AC-DC BATTERY CHARGERS IP65 POWER+



Part Number	YPO12-20STPL-IP	YPO12-30STPL-IP	YPO24-15STPL-IP*
Model	12V/20A	12V/30A	24V/15A
Recommended lead-type battery bank	100-200Ah	200-300Ah	100-200Ah
Recommended Lithium batteries (LiPOWER+)	LIP12-100-BMS		LIP24-100-BMS
Input			
AC Voltage	From 90 to 265VAC single-phase automatic		
DC Voltage	From 121 to 375VDC		
Frequency	From 47 to 65Hz automatic		
Current consumed 230/115VAC	1.3/2.6A	2/4A	2/4A
Recommended power for a generator	450W	650W	650W
Power factor	1		
Efficiency	92.8% in 230VAC & 91% in 115VAC		
Input fuse	T6.3A/250V		T6.3A/250V
Output			
Number of battery banks	2	3	2
	Each bank can be used individually and delivers the rated current		
Nominal current (+/-7%) @ rated power	20A/276W	30A/414W	15A/414W
Charging curve	Charging curve selection by push-button, Bluetooth® or CAN BUS (Boost, Absorption, Floating and Refresh)		
Battery type	Sealed lead as factory setting - Gel, AGM, calcium lead, LiFePO4, DC power-supply mode, etc. Specific request on demand		
Boost voltage for sealed lead battery (factory setting)	14.4VDC		28.8VDC
Floating voltage for sealed lead battery (factory setting)	13.8VDC		27.6VDC
Peak to peak ripple and noise	< 2% (at rated conditions)		
Automotive fuses mounted in series in minus pole -BAT	1 x 30A/32V	2 x 30A/32V	1 x 30A/32V
Environment			
Cooling	Natural (fanless)		
Sound level	0 dB		
Operating T° at 230VAC	From -20°C to +60°C (-4°F to +140°F)		
Derating	from 60°C (140°F)	from 40°C (104°F)	from 40°C (104°F)
Storage T°	From -20°C to +70°C (-4°F to +158°F)		
Bluetooth®	Low Energy Bluetooth® - Power: +9dBm (frequency: 2412-2484MHz)		
Casing			
Material	Aluminium sink frame and clasp / Thermoplastic body		
Dimensions (length, height, depth)	238 x 181 x 81mm (9.4 x 7.1 x 3.2 in) (without cables)		
Weight	2kg (4.4 lb)		
Fixing center distance	219 x 155mm (8.6 x 6.1 in)		
Fixing screw (wall)	4 M5 round head screws - not supplied		
Ingress protection	IP65		
Electronic card protection	IP65 waterproof sealed casing		
AC & DC cable length	AC = 1.9m / DC = 1.8m / M8 ring lugs		
Standards			
CE declaration of conformity	Available on request		
CE / EMC	EN61204-3		
CE / Security	EN60335-2-29 - ISO8846/SAE J1171		
ABYC	A-31		
Protections			
Against transient input overvoltage by varistor (Not covered by warranty) / Against output polarity reversal by fuses / Against short-circuits and output overloads / Against abnormal overheating			
Communication			
		Bluetooth® (CAN BUS on option)	
Options			
		Temperature probe & OTD probe (Over Temperature Device) ref: 2.8m: STP-UNI-2.8 / 5m: STP-UNI-5.0, CAN BUS	

* Availibility Q1 2027

HPOWER

Warranty 3 years

8.9/10 Repairability index



Standard Certified

BUREAU VERITAS

Rugged

HPOWER has been designed to cope with the toughest conditions for the professional and recreational industries.

3 isolated battery banks

Simultaneous recharge of 3 independent battery banks, without any current limitation.

Worldwide use

Automatic detection of power supply network, from 90 to 265VAC and from 47 to 65Hz. You do not have to care about the AC power grid and genset voltage.

Easy installation

Because of its HF technology **HPOWER** is very light (3 or 4 times lighter than low frequency technology).

Parallel operation

The chargers can be mounted in parallel to increase the charging power: up to 4 units (balancing through lead-follower function).

No derating

50°C

Chargers have full charge up to +50°C (122°F) with no loss, resistant to harsh environment.

BV certified version

Marine class type-approved version with integrated touch-screen control panel and relays board (option).

5-stage charging profile

- **Boost**: charges batteries to 80% of full charge
- **Absorption**: slowly completes remaining charge to 100%
- **Floating**: maintains battery charge
- **Automatic refresh**: prevents sulphation and revitalizes batteries, selectable by keypad pushbutton
- **Reboost**: new automatic Boost phase if DC consumers and the state of batteries so require.

A regulated DC power-supply mode is also available and **HPOWER** chargers can also be used as high-voltage DC-DC converters with input ranging from 121 to 375VDC.

Adaptative charging

Custom-made and simultaneous recharge of 3 battery banks.
HPOWER chargers can be connected to various types of batteries simultaneously:
- Opened classic lead
- Sealed, gel or AGM
- Spiral sealed
- Lithium Iron Phosphate (LiFePO4) with BMS

Li Lithium

Remote control

The chargers are fitted with a CAN BUS (and a LIN-BUS screen for certified models).
Connection to an NMEA network is also available through an optional adaptor (PN 001600).

NMEA 2000

Ignition protected

All models can be installed in the engine room thanks to **ISO8846/SAE J1171** compliance which protects against ignition of flammable gases.

AC-DC BATTERY CHARGERS HPOWER

Parallel mounting

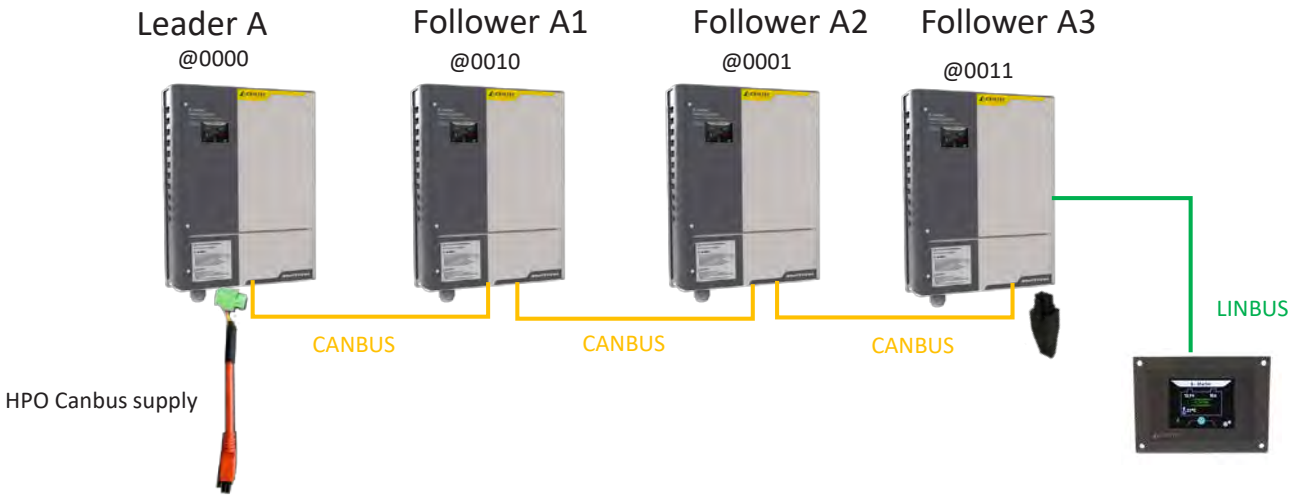

Up to 4 x chargers in parallel
Balancing via LIN or CAN BUS
1 single display
CAN BUS





AC-DC BATTERY CHARGERS HPOWER



BV certified version ISO 9001:2015

With integrated touch-screen control panel and relays board.



12V

Part Number (standard)	HPO12-90
Part Number marine type approved	**HPO12-90-CERT**
Model	12V-90A
Recommended lead-type battery bank	600 - 1200Ah
Recommended Lithium batteries (LiPOWER+)	LIP12-200-BMS or LIP12-300-BMS
Input	
AC Voltage	From 90 to 265VAC single-phase automatic
DC Voltage	From 121 to 346VDC
Frequency	From 47 to 65Hz automatic
Input current consumption 230/115VAC	6,0A/16,0A
Recommended power for a generator	1600W
Power factor	1
Efficiency	87% typical
Removable input fuses	2 x 20A 250VAC (6,3 x 32) (F1/F2)
Output	
Number of battery banks	3 (including one for the engine battery) : +BAT E, +BAT 1 et +BAT 2 (integrated isolator), 1 negative -BAT. Each bank can be used individually and deliver the rated current
Connection on threaded rods	M6
Rated current / power	90A/1282W
Charging profile	IU or IUoU through internal dip switches (Boost, Absorption and Floating – factory setting). Selectable automatic Refresh
Battery type	Lead-sealed as factory setting - Gel, AGM, Calcium Lead, Lithium, DC power-supply mode, etc. Specific request on demand
Boost voltage	14,4VDC as factory setting for Lead-sealed
Floating voltage	13,8VDC as factory setting for Lead-sealed
Regulation tolerance before output diode and fuse	< 1 % (at rated conditions)
Peak to peak ripple	< 1 % (at rated conditions)
Automotive fuse in the minus pole -BAT	4 x 30A/32V
Environment	
Cooling	Electric fan controlled in temperature and current
Sound level	< 50 dB SPL at 1m
Operating temperature	Rated charge from -20°C (-4°F) to +50°C (122°F), derating above 50°C (122°F) Automatic charger switch off above 60°C (140°F); automatic restart when temperature decreases
Storage T°	From -20°C to +70°C (-4°F to +158°F)
Relative humidity	Up to 96 % without condensation
Casing	
Material	Painted Aluminium
Dimensions (length, height, depth)	270 x 360 x 130 mm (106 x 141,7 x 51,1 in)
Weight	6,8 kg (15 lbs)
Fixing screw (wall)	4 x M6 round screws - not supplied
Ingress protection	IP23
PCB protection	Water-repellent varnish (marine environment)
Standards	
CE / EMC	EN61204-3
CE / Security	EN60335-2-29, ISO8846/SAE J1171 - ignition protected
Protections	
	Against leaking input surge by VDR (Voltage Dependant Resistor) - Not covered by warranty / Against output polarity reversal by fuse rupture Against short-circuit and surge / Against abnormal overheating by cutting off the charger
Communication	
	CAN BUS (NMEA on option, see item 11 p.93)
Options	
Temperature probe	Output voltage compensation for 12V : -18mV/°C (ref: 2.8m: STP-UNI-2.8 or 5m: STP-UNI-5.0)
CAN BUS supply cable	002430
2.4" remote color touch-screen control panel	UNI-DISPLAY-R

AC-DC BATTERY CHARGERS HPOWER



BV certified version ISO 9001:2015

With integrated touch-screen control panel and relays board.



24V

Part Number (standard)	HPO24-45	HPO24-60	HPO24-80	HPO24-100
Part Number marine type approved	**HPO24-45-CERT**	**HPO24-60-CERT**	**HPO24-80-CERT**	**HPO24-100-CERT**
Model	24V-45A	24V-60A	24V-80A	24V-100A
Recommended lead-type battery bank	300 - 600Ah	500 - 800Ah	700 - 1000Ah	800 - 1300Ah
Recommended Lithium batteries (LiPOWER+)	LIP24-100-BMS	LIP24-200-BMS		
Input				
AC Voltage	From 90 to 265VAC single-phase automatic			
DC Voltage	From 121 to 346VDC			
Frequency	From 47 to 65Hz automatic			
Input current consumption 230/115VAC	6,0A/16,0A	9,0A/20,0A	11,0A/20,0A	15,0A/30,0A
Recommended power for a generator	1600W	2100W	2800W	3520W
Power factor	1			
Efficiency	87% typical			
Removable input fuses	2 x 20A 250VAC (6,3 x 32)	2 x 25A 250VAC (6,3 x 32)		2 x 32A 250VAC (6,3 x 32)
Output				
Number of battery banks	3 (including one for the engine battery) : +BAT E, +BAT 1 et +BAT 2 (integrated isolator), 1 negative -BAT. Each bank can be used individually and deliver the rated current			
Connection on threaded rods	M6			
Rated current / power	45A/1282W	60A/1710W	80A/2280W	100A/2850W
Charging profile	IU or IUoU through internal dip switches (Boost, Absorption and Floating – factory setting). Selectable automatic Refresh			
Battery type	Lead-sealed as factory setting - Gel, AGM, Calcium Lead, Lithium, DC power-supply mode, etc. Specific request on demand			
Boost voltage	28,8VDC as factory setting for Lead-sealed			
Floating voltage	27,6VDC as factory setting for Lead-sealed			
Regulation tolerance before output diode and fuse	< 1 % (at rated conditions)			
Peak to peak ripple	< 1 % (at rated conditions)			
Automotive fuse in the minus pole -BAT	2 x 30A/32V	3 x 25A/32V	4 x 25A/32V	5 x 30A/32V
Environment				
Cooling	Electric fan controlled in temperature and current			
Sound level	< 50 dB SPL at 1m			
Operating temperature	Rated charge from -20°C (-4°F) to +50°C (122°F), derating above 50°C (122°F) Automatic charger switch off above 60°C (140°F); automatic restart when temperature decreases			
Storage T°	From -20°C to +70°C (-4°F to +158°F)			
Relative humidity	Up to 96 % without condensation			
Casing				
Material	Painted Aluminium			
Dimensions (length, height, depth)	270 x 360 x 130 mm (106 x 141,7 x 51,1 in)			270x410x130mm (106 x 161,4x51,1in)
Weight	6,8 kg (15 lbs)			9,0 kg (19,8 lbs)
Fixing screw (wall)	4 x M6 round screws - not supplied			
Ingress protection	IP23			
PCB protection	Water-repellent varnish (marine environment)			
Standards				
CE / EMC	EN61204-3			
CE / Security	EN60335-2-29, ISO8846/SAE J1171 - ignition protected			
Protections				
	Against leaking input surge by VDR (Voltage Dependant Resistor) - Not covered by warranty / Against output polarity reversal by fuse rupture Against short-circuit and surge / Against abnormal overheating by cutting off the charger			
Communication				
	CAN BUS (NMEA on option, see item 11 p.93)			
Options				
Temperature probe	Output voltage compensation for 24V : -36mV/°C (ref: 2.8m: STP-UNI-2.8 or 5m: STP-UNI-5.0)			
CAN BUS supply cable	002430			
2.4" remote color touch-screen control panel	UNI-DISPLAY-R			

AC-DC BATTERY CHARGERS HPOWER



48V

Part Number (standard)	HPO48-30	HPO48-40	HPO48-50
Model	48V / 30A	48V / 40A	48V-50A
Recommended lead-type battery bank	150-400Ah	250-500Ah	350-700Ah
Recommended Lithium batteries (LiPOWER+)	LIP48-100-BMS		
Input			
AC Voltage	From 90 to 265VAC single-phase automatic		
DC Voltage	From 121 to 346VDC		
Frequency	From 47 to 65Hz automatic		
Input current consumption 230/115VAC	9,0A/20,0A	11,0A/20,0A	15,0A/30,0A
Recommended power for a generator	2100W	2650W	3520W
Power factor	1		
Efficiency	87% typical		
Removable input fuses	2 x 25A 250VAC (6,3 x 32)		2 x 32A 250VAC (6,3 x 32)
Output			
Number of battery banks	3 (including one for the engine battery) : +BAT E, +BAT 1 et +BAT 2 (integrated isolator), 1 negative -BAT. Each bank can be used individually and deliver the rated current		
Connection on threaded rods	M6		
Rated current / power	30A/1710W	40A/2650W	50A/2850W
Charging profile	IU or IUoU through internal dip switches (Boost, Absorption and Floating – factory setting). Selectable automatic Refresh		
Battery type	Lead-sealed as factory setting - Gel, AGM, Calcium Lead, Lithium, DC power-supply mode, etc. Specific request on demand		
Boost voltage	57,6VDC as factory setting for Lead-sealed		
Floating voltage	52,2VDC as factory setting for Lead-sealed		
Regulation tolerance before output diode and fuse	< 1 % (at rated conditions)		
Peak to peak ripple	< 1 % (at rated conditions)		
Automotive fuse in the minus pole -BAT	2x20A/80V	2x30A/80V	3x20A/80V
Environment			
Cooling	Electric fan controlled in temperature and current		
Sound level	< 50 dB SPL at 1m		
Operating temperature	Rated charge from -20°C (-4°F) to +50°C (122°F), derating above 50°C (122°F) Automatic charger switch off above 60°C (140°F); automatic restart when temperature decreases		
Storage T°	From -20°C to +70°C (-4°F to +158°F)		
Relative humidity	Up to 96 % without condensation		
Casing			
Material	Painted Aluminium		
Dimensions (length, height, depth)	270 x 360 x 130 mm (106 x 141,7 x 51,1 in)		270 x 410 x 130 mm (106 x 161,4 x 51,1 in)
Weight	6,8 kg (15 lbs)		9,0 kg (19,8 lbs)
Fixing screw (wall)	4 x M6 round screws - not supplied		
Ingress protection	IP23		
PCB protection	Water-repellent varnish (marine environment)		
Standards			
CE / EMC	EN61204-3		
CE / Security	EN60335-2-29, ISO8846/SAE J1171 - ignition protected		
Protections			
	Against leaking input surge by VDR (Voltage Dependant Resistor) - Not covered by warranty / Against output polarity reversal by fuse rupture Against short-circuit and surge / Against abnormal overheating by cutting off the charger		
Communication			
	CAN BUS (NMEA on option, see item 11 p.93)		
Options			
Temperature probe	Output voltage compensation for 48V : -72mV/°C (ref: 2.8m: STP-UNI-2.8 or 5m: STP-UNI-5.0)		
CAN BUS supply cable	002430		
2.4" remote color touch-screen control panel	UNI-DISPLAY-R		



photo: BENETEAU GRAN TURISMO 40 OPEN J. Kelagopian

Shore-power distribution chargers

UEPOWER+



Silent

Compact

Up to 4 outputs

Bluetooth®

Lithium

UEPOWER+

Warranty 3 years

9.4/10 Repairability index

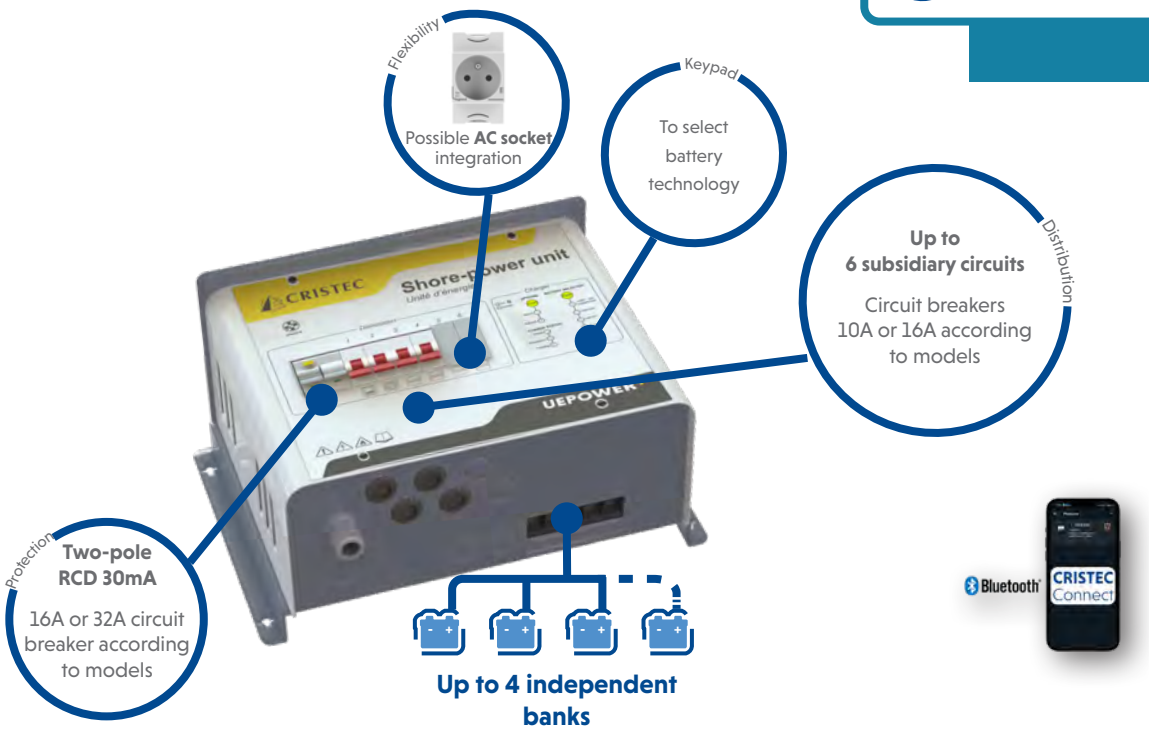

Presentation

A shore-power unit is more than just a battery charger. When a yacht is connected to mains electricity in harbour, **CRISTEC UEPOWER+** provides a complete, compact solution by combining:

- **AC circuit protection:** RCDs and MCBs safeguard on-board systems
- **Power distribution:** multiple protected outputs for sockets and appliances
- **Battery charging:** via a built-in, fanless, **CRISTEC YPOWER+** multi-stage charger, fully compatible with lead-acid, AGM and Lithium batteries

By integrating these functions into a simple cabinet, **CRISTEC UEPOWER+** save installation time, reduce wiring complexity and ensure long-term reliability.

Silent operating

CRISTEC offers shore-power units with natural convection (without fan).
This specificity gives them a completely silent operation and an optimized lifespan.

Up to 4 independent banks

The shore-power units have either 3 or 4 independent charger banks, including one dedicated to the engine battery.

Worldwide use

Automatic detection of power supply network, from 90 to 265VAC and from 47 to 65Hz. You do not have to care about the AC power grid and genset voltage.

Easy to install

Selection of the battery technology can be done via the front keypad or via Bluetooth® application or CAN BUS communication.

Remote control

The chargers are fitted with a CAN BUS and a Bluetooth® interface as standard. Connection to an NMEA network is also available through an optional adaptor (PN: 001600).

NMEA 2000

5-stage charging profile

- **Boost**: charges batteries to 80% of full charge
- **Absorption**: slowly completes remaining charge to 100%
- **Floating**: maintains battery charge
- **Automatic refresh**: prevents sulphation and revitalizes batteries, selectable by keypad pushbutton
- **Reboost**: new automatic Boost phase if DC consumers and the state of batteries so require.

Adaptative charging

Custom-made and simultaneous recharge of either 3 or 4 battery banks.
UEPOWER+ shore-power units are compatible with all types of batteries:
- Opened classic lead
- Sealed, gel or AGM
- Spiral sealed
- Lithium Iron Phosphate (LiFePO4) with BMS

Low Energy Bluetooth®

The shore-power units are equipped with a Bluetooth® Low Energy , variant of "classic" Bluetooth® . The major advantage of Bluetooth® Low Energy is its low power consumption as it consumes half of a classic Bluetooth® .

SHORE-POWER DISTRIBUTION CHARGERS UEPOWER+

Example of installation

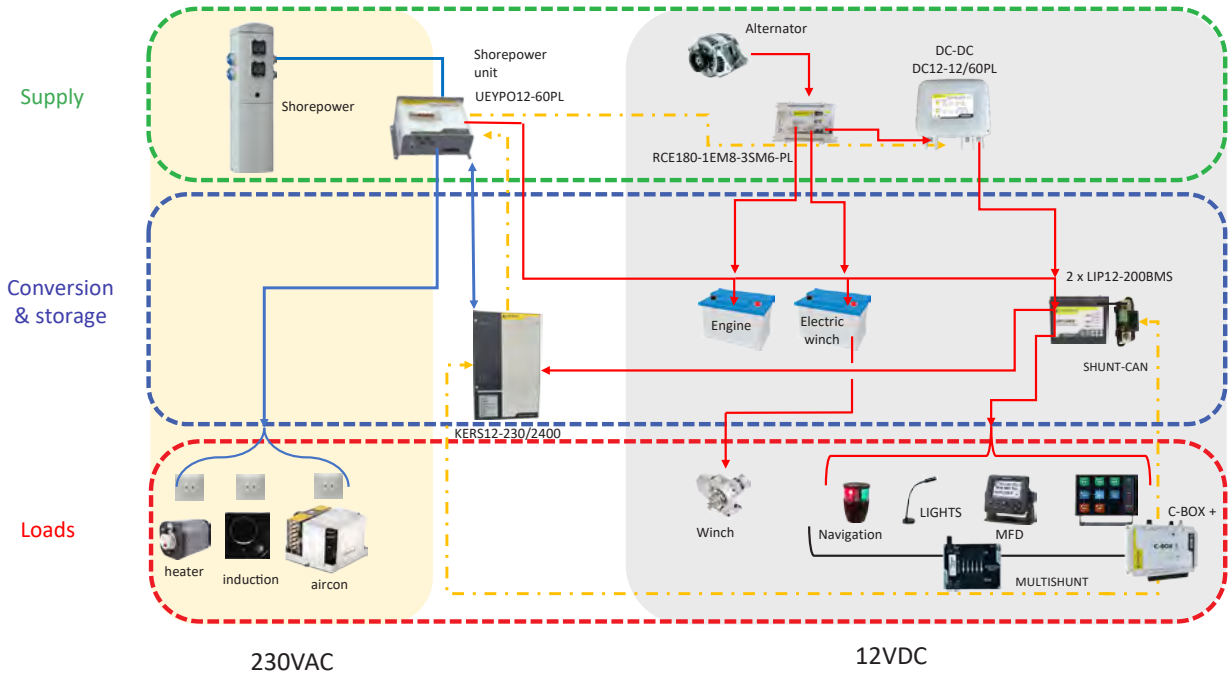

Choosing a charging curve on the UEPOWER+

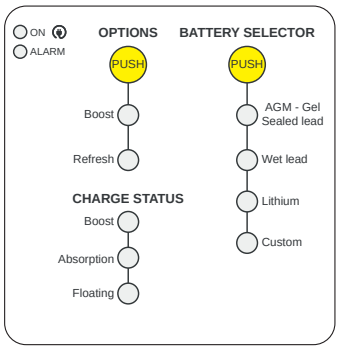

With the PUSH button of the BATTERY SELECTOR you can choose the battery technology and its associated charging curve. If you use the Bluetooth® application on your mobile phone or tablet and choose a different charging curve the CUSTOM led switches on.

When choosing any battery technology above, the BOOST charging curve from the OPTIONS menu is selected by default. When the PUSH button is pressed again, you select the **5-step charging curve** with BOOST and REFRESH as follows :

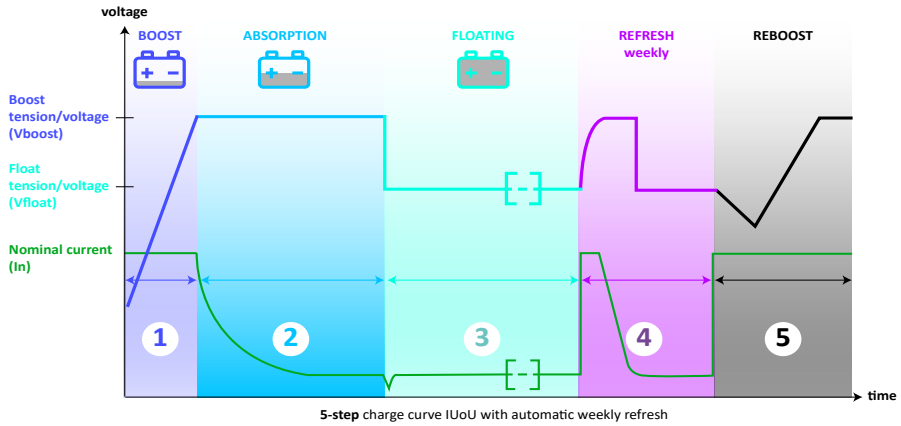

5-step charge curve IUoU with automatic weekly refresh

If no OPTIONS are selected (no green led is lit on the OPTIONS menu) the charging curve starts with the Float voltage.

SHORE-POWER DISTRIBUTION CHARGERS UEPOWER+

Typical installation

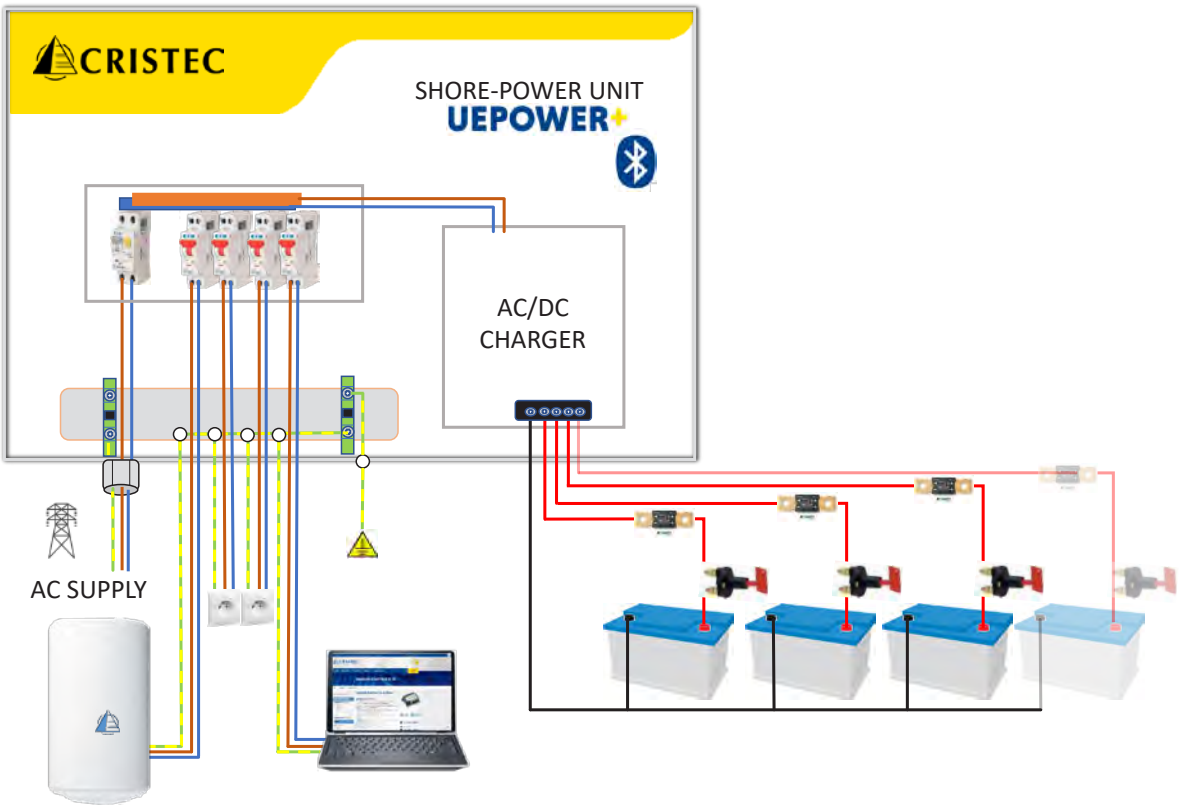



SHORE-POWER DISTRIBUTION CHARGERS
UEPOWER+

12V

	AC electrical panel			Battery charger			
Model	**Main RCD**	**AC outputs**	**Circuit breakers**	**Voltage**	**Nominal current**	**Recommended battery bank [1]**	**Number of outputs**
UEYPOPL/12-20/2D	30mA / 16A	2	2 x 10A	12V	20A	100-200Ah	3
UEYPOPL/12-20/3D		3	3 x 10A				
UEYPOPL/12-20/4D		4	4 x 10A				
UEYPOPL/12-30/2D		2	2 x 10A		30A	200-300Ah	3
UEYPOPL/12-30/3D		3	3 x 10A				
UEYPOPL/12-30/4D		4	4 x 10A				
UEYPOPL/12-40/3D		3	3 x 10A		40A	300-400Ah	4
UEYPOPL/12-40/4D		4	4 x 10A				
UEYPOPL/12-40/4D3*	30mA / 32A		1 x 10A + 3 x 16A				
UEYPOPL/12-60/3D	30mA / 16A	3	3 x 10A		60A	400-600Ah	4
UEYPOPL/12-60/4D		4	4 x 10A				
UEYPOPL/12-60/4D3*	30mA / 32A		1 x 10A + 3 x 16A				

*Compliant for USA

Model	**UEPOWER+ 12V-20A**	**UEPOWER+ 12V-30A**	**UEPOWER+ 12V-40A**	**UEPOWER+ 12V-60A**
Casing				
Material	Frame and cover of EZ steel / Anodized aluminium heatsink			
Dimensions (length, height, depth)	350 x 241 x 171mm (13,77 x 9,48 x 6,73in)			
Weight	7Kg (15,43lbs)			
Fixing center distance	180 x 133mm (7,08 x 5,23in)			
Fixing screw (wall)	4 x M5 round head screws			
Ingress protection	IP20			
Input				
Voltage	115VAC [2] / 230VAC +/-15% single-phase			
Frequency	50/60Hz [2]			
Current consumed 230/115VAC	1.3/2.6A	2/4A	2.7/5.6A	4.4/8.7A
Efficiency	92.8% in 240VAC & 91% in 120VAC			
Output				
Number of battery banks	3 separate positive terminals: +BAT E, +BAT 1 and +BAT 2 (integrated MOSFET splitter) 1 negative terminal : -BAT Each bank can be used individually and delivers the rated current		4 separate positive terminals : +BAT E, +BAT 1, +BAT 2 and +BAT 3 (integrated MOSFET splitter) 1 negative terminal : -BAT Each bank can be used individually and delivers the rated current	
Nominal current (+/-7%) @ rated power	20A/276W	30A/356W	40A/570W	60A/855W
Charging curve	Charging curve selection by keypad, Bluetooth® application or CAN BUS communication			
Battery type	Sealed lead, Gel, AGM as factory setting - Other selections by pushbutton : calcium lead, LiFePO4, DC power-supply mode, etc. Specific request on demand			
Automotive fuses mounted in series in minus pole -BAT	1 x 30A/32V	2 x 30A/32V	3 x 30A/32V	4 x 30A/32V
Electrical protections				
	Against transient input overvoltage by varistor (not covered by warranty) / Against output polarity reversal by fuses / Against abnormal overheating			
Environment				
Sound level	0 dB			
Bluetooth®	Low Energy Bluetooth® - Power: +9dBm (frequency: 2412-2484MHz)			
Standards				
CE / EMC	NF EN61000-6-1, NF EN61000-6-2			
Communication				
	CAN BUS (NMEA on option) / Low Energy Bluetooth®			
Option				
Temperature probe	Output voltage compensation -18mV/°C (ref: 2.8m: STP-UNI-2.8 or 5m: STP-UNI-5.0)			

[1] Overall battery capacity recommended for lead-type batteries, C/10. For Lithium batteries, C/3, consult us if needed.
[2] Consult CRISTEC for any use at 115VAC/60Hz

SHORE-POWER DISTRIBUTION CHARGERS
UEPOWER+

24V

UEPOWER+ 24V-25A	AC electrical panel			Battery charger			
Model	Main RCD	AC outputs	16A circuit breakers	Voltage	Nominal current	Recommended battery bank(1)	Number of outputs
UEYPOPL/24-25/3D	30mA / 16A	3	3 x 10A	24V	25A	200-300Ah	3
UEYPOPL/24-25/4D		4	4 x 10A				
UEYPOPL/24-25/4D3*	30mA / 32A		3 x 10A + 1 x 16A				

UEPOWER+ 24V-35A	AC electrical panel			Battery charger			
Model	Main RCD	AC outputs	16A circuit breakers	Voltage	Nominal current	Recommended battery bank(1)	Number of outputs
UEYPOPL/24-35/3D	30mA / 16A	3	3 x 10A	24V	35A	200-400Ah	4
UEYPOPL/24-35/4D		4	4 x 10A				
UEYPOPL/24-35/4D3*	30mA / 32A		3 x 10A + 1 x 16A				

*Complient for USA

Model	UEPOWER+ 24V-25A	UEPOWER+ 24V-35A
Casing		
Material	Frame and cover of EZ steel / Anodized aluminium heatsink	
Dimensions (length, height, depth)	350 x 241 x 171mm (13,77 x 9,48 x 6,73in)	
Weight	7Kg (15,43lbs)	
Fixing center distance	180 x 133mm (7,08 x 5,23in)	
Fixing screw (wall)	4 x M5 round head screws	
Ingress protection	IP20	
Input		
Voltage	115VAC(2) / 230VAC +/-15% single-phase	
Frequency	50/60Hz(2)	
Current consumed 230/115VAC	2.7/5.6A	4.4/8.7A
Efficiency	92.8% in 240VAC & 91% in 120VAC	
Output		
Number of battery banks	3 or 4 separate positive terminals : +BAT E, +BAT 1, +BAT 2 and +BAT 3 (integrated MOSFET splitter) 1 negative terminal : -BAT Each bank can be used individually and delivers the rated current	
Nominal current (+/-7%) @ rated power	25A/690W	35A/966W
Charging curve	Charging curve selection by keypad, Bluetooth® application or CAN BUS communication	
Battery type	Sealed lead, Gel, AGM as factory setting - Other selections by pushbutton : calcium lead, LiFePO4, DC power-supply mode, etc. Specific request on demand	
Automotive fuses mounted in series in minus pole -BAT	3 x 30A/32V	
Electrical protections		
	Against transient input overvoltage by varistor (not covered by warranty) / Against output polarity reversal by fuses / Against abnormal overheating	
Environment		
Sound level	0 dB	
Bluetooth®	Low Energy Bluetooth® - Power: +9dBm (frequency: 2412-2484MHz)	
Standards		
CE / EMC	NF EN61000-6-1, NF EN61000-6-2	
Communication		
	CAN BUS (NMEA on option) / Low Energy Bluetooth®	
Option		
Temperature probe	Output voltage compensation -36mV/°C (ref: 2.8m: STP-UNI-2.8 or 5m: STP-UNI-5.0)	

(1) Overall battery capacity recommended for lead-type batteries, C/10. For Lithium batteries, C/3, consult us if needed.
(2) Consult CRISTEC for any use at 115VAC/60Hz

OPTIONS

	Category	YPOWER+			UEPOWER+	HPOWER	DCPOWER+	MPPTPOWER+
	Model	12-20 12-30 24-15	12-40 12-50	12-60 12-70				
1	2.4" Remote touch-screen control panel	-			-	UNI-DISPLAY-R	-	-
2	External varistor for unstable AC Mains	000528						
3	Temperature probe 5m	STP-UNI-5.0						
	Temperature probe 2.8m	STP-UNI-2.8						
4	Alternator temperature probe	-					STP-ALT-2.4	-
5	HPOWER CAN BUS supply cable	-				002430	-	
6	AC input connector [1]	30024064			-			
7	DC 3 outputs connector [1]	30033787	-					
8	DC 4 outputs connector [1]	-	30038370	30037678	-			
9	Parallelization kit 1M [2]	SEEL030319						
	Parallelization kit 3M [2]	SEEL030320						
10	Microfit cap 3.0 120 ohms [2] NMEA 2000	30037624	-				30037624	
11	MICROFIT - MICRO C male cable	001600						
12	AC european socket 250VAC 16A 2PH+N	-			001797	-		
13	Ground Fault Circuit Interrupters (GFCI) 16A	-			001075	-		
14	Breakers MCB 10A	-			000845	-		
15	On/Off remote control	G-ON/OFF-R-PL						-

[1] for cable harness external to the charger , [2] parallel mounting via CAN BUS to increase the current , [3] Except YPOWER 12V/60A model, reference 30033788

1 

2.4" remote color touch-screen control panel

UNI-DISPLAY-R : also available integrated on the front panel, please consult us

2 

External varistor for unstable AC Mains

000528

3 

Temperature probe

For charger output voltage compensation
(12V : -18mV/°C • 24V : -36mV/°C)
2.8 meters long: STP-UNI-2.8
5 meters long: STP-UNI-5.0

4 

Alternator temperature probe

This option is fitted with :
- 1 self-tapping screw
- 2 cable ties
- 1 mechanical adaptation part
- 1 probe of 20cm long with a connector MC 1.5/2 ST-3.51
- 1 cable of 2,2 m with 1 connector MC 1.5/2 ST-3.5 and 1 IMC 1.5/2 ST-3.81

5 

HPOWER CAN BUS supply cable

allows you to power the CAN bus using an external battery, enabling the chargers to communicate in standalone mode (parallel operation). The charge process is unique and controlled by the master.

6 

AC input connector

7 

DC 3 outputs connector

8 

DC 4 outputs connector

9 

Parallelization kit

Microfit cable 3.0 - 6 contacts - 2 Microfit caps 3.0 120 ohms)

10 

Microfit cap

11 

MICROFIT/MICRO-C CABLE

0,2m MICROFIT/MICRO-C male cable to link with NMEA 2000 systems. Already compliant and tested with : SIMRAD, B & G & NOVA navigation systems.

12 

AC european socket

250VAC 16A 2PH+N

13 

Ground Fault Circuit Interrupters (GFCI)

16A 30mA 10kA AC

14 

Breakers MCB

10A 4,5kA PH+N

15 

On/Off remote control

G-ON/OFF-R-PL & G-ON/OFF-R


BALI 4.2
BALI 4.2
BALI
BALI
4.2

Energy management

BAT-MON



FLEXCAN



AC voltmeter



Frequency converters FREQ



ZENPOWER



CAN BUS interface

Independant device

12V 24V 48V

Multi-voltage

Protects against overload & overcharge

BAT-MON

Warranty 3 years

8.9/10 Repairability index

12V

24V

36V

48V



Shunt 300A

+



Battery monitor

Presentation

The battery monitor **BAT-MON** shows all relevant standard data such as voltage, current, remaining capacity and time of the service battery plus one additional voltage for starter or bow battery at the same time. Moreover the battery monitor **BAT-MON** records historic data of your battery such as average discharge depth, unavailable capacity and number of charge/discharge cycles.
An active high-precision 300A shunt unit is provided as standard for battery control. Two extra ones can be used as option. For each shunt used an additional voltage measurement is also available (i.e. bow-thruster battery).
Up to 3 battery banks or power generation (DC source) with 3 additional battery voltage readings. It operates at 12, 24, 36 and 48V and is suitable for all types of batteries, including Lithium.

Note : BAT-MON can monitor different battery voltages in a same installation if all negatives are common.

Why is BAT-MON essential?
Because it monitors:
- Starter and House bank battery voltage in order to check that they are not faulty (too low voltage)
- House bank battery current to determine the remaining capacity of the installation which is essential for on board confort

The shunt sends an alarm to the monitor (flashing and sound alarm) and can switch a relay to start a genset.
A CAN BUS interface shunt is also available (reference FLEXCAN).

Monitor Part number	BAT-MON-3.5-3
Supply voltage	DC 8-64 V
Current consumption	55 mA @ 12V, 5 mA in sleep mode 26 mA @ 24V, 3 mA in sleep mode 21 mA @ 36V, 3 mA in sleep mode 14 mA @ 48V, 2 mA in sleep mode
Relay contact	1A / DC 30V / Dielectric strength: AC 1000V
Dimensions (Length, height, depth)	100 x 105 x 40 mm (3.9 x 4.1 x 1.5 in)

Shunt Part number	SHUNT-300-3.5-3
Current consumption	22mA @ 12V, 5mA in sleep mode 11mA @ 24V, 3mA in sleep mode 9mA @ 36V, 3mA in sleep mode 6mA @ 48V, 2mA in sleep mode
Resistance	0.1mΩ
Voltage measuring range (+1)	DC 0-64V, resolution 30mV, accuracy 0.25%
Voltage measuring range (+2)	DC 0-52V, resolution 30mV, accuracy 0.25%
Current carrying capacity	300A, 600A 1min, 1500A 0.5 sec.
Current measuring range	-600 to +600A, resolution 10mV, accuracy 0.5%
Temperature measuring range	External sensor: -15 to 60°C, resolution 1K, accuracy 1K
Dimensions (Length, height, depth)	119 x 43 x 44 mm (4.6 x 1.6 x 1.7 in)
Connections	Bolt M8

Options



Wiring kit SEEL017153



Temperature probe 2.8 m STP-UNI-2.8



Temperature probe 5 m STP-UNI-5.0

BAT-MON

Examples of installation

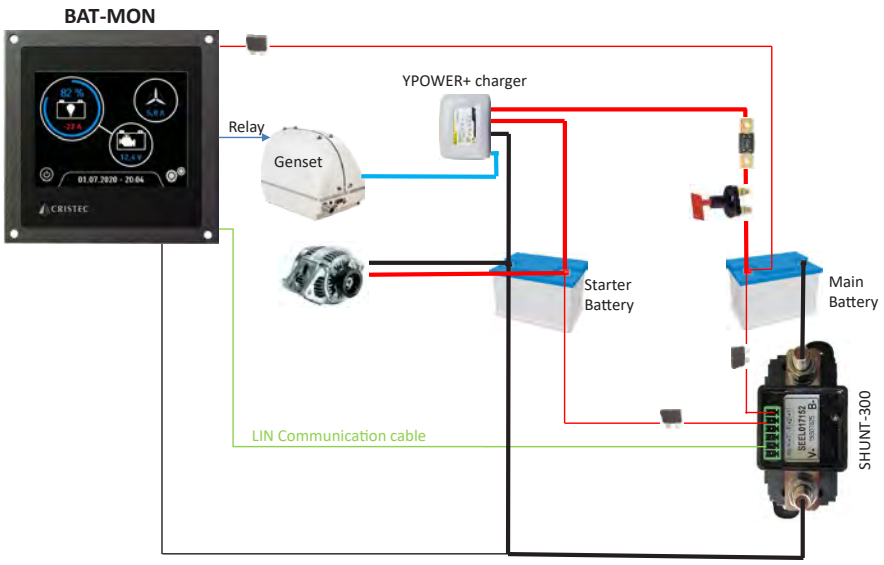

Shunt 300 measures the voltage of Starter battery and the voltage, current, temperature of the main battery. A low voltage of the Main battery can trigger a relay of the BAT-MON in order to start the genset.

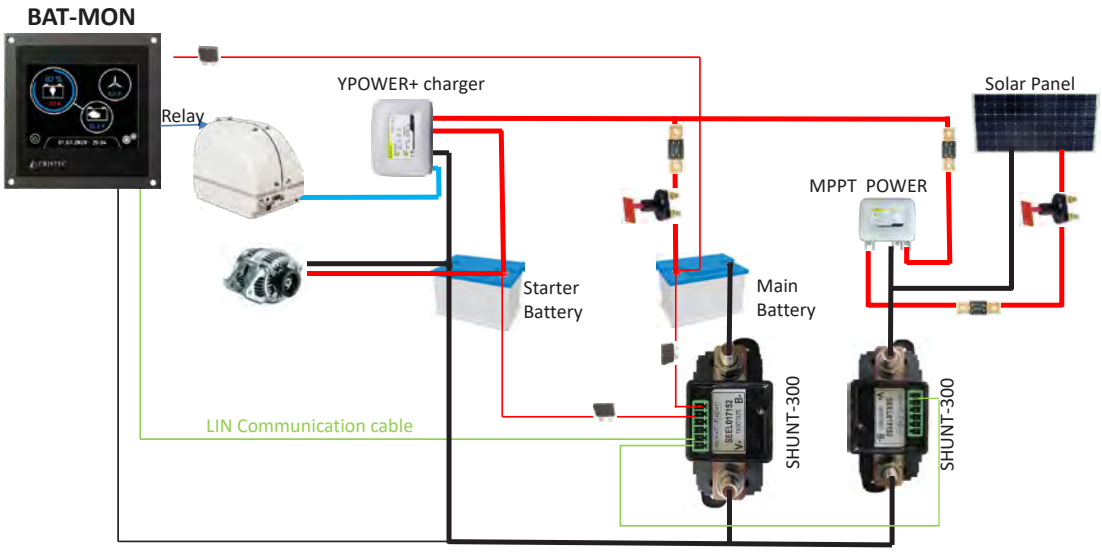

Shunts can be daisy chained to display on the same monitor the energy state of the whole installation

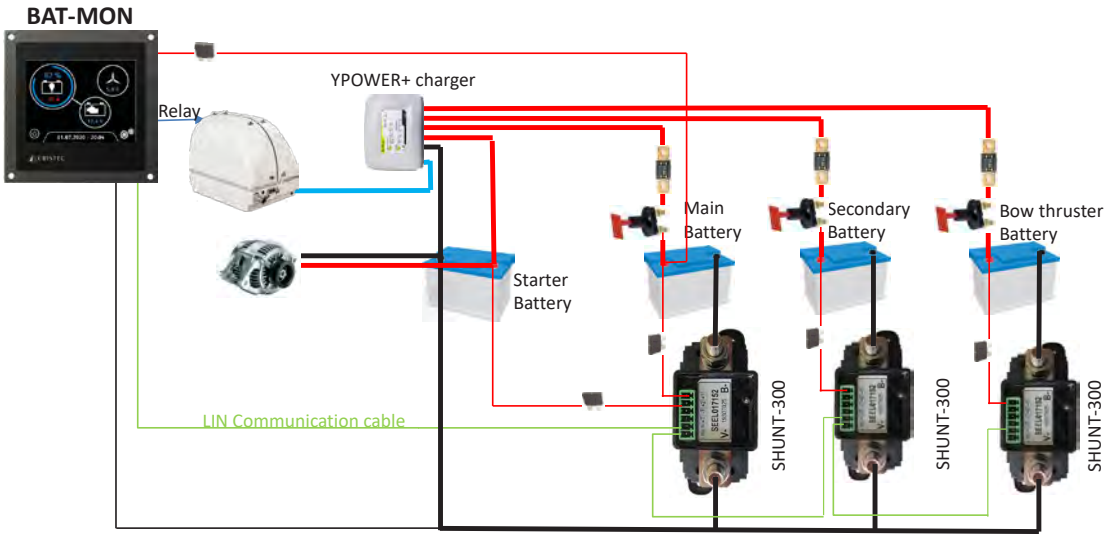

BAT-MON can monitor up to 6 batteries

FLEXCAN

Warranty 3 years

12V-24V

36V-48V

Part number
SHUNT-300-CAN
SHUNT-300-CAN-500K
SHUNT-300-CAN-1000K



Presentation

With FLEXCAN shunt you are able to monitor on CAN BUS your complete battery system and/or the current flow of DC energy sources such as solar panels. It can operate in two different modes.

In battery mode:
- Voltage
- Current
- Temperature
- Capacity and remaining autonomy time of the battery
- Number of deep charge and discharge cycles
- Voltage reading of an additional battery

In energy mode:
- Energy yield in Ampere hour to track current flow of energy sources such as alternators, solar cells or hydrogenerators

Characteristics

- Voltage measurement range : from 8 to 64VDC
- Resolution: 30mV Accuracy : 0.25%
- Current load capacity : 300A, 600A 1 min, , 1500A 0.5 sec.
- Current measurement range : external sensor -15 to +60°C
- Resolution: 10mA - Accuracy : 0.5%
- Selection of the identifier by push button
- Possibility of using up to 16 shunts per network
- Dimensions : L 119 x l 43 x h 44 mm
- Connexion : M8 terminal
- Option : 2.8m STP-UNI-2.8 and 5m STP-UNI-5.0 temperature probe.
- CAN BUS speed from 250 to 1000Kb/s.
- The CAN BUS is isolated: you can place your shunts on various isolated circuits.

2 operating modes

If you want to monitor a battery, choose battery mode. For energy source tracking, select the energy mode.

Multi voltage

The **FLEXCAN** shunt is an autonomous device which, thanks to its integrated CAN BUS interface, allows multi-voltage use: 12V, 24V, 36V or 48V up to 64V.

Lithium ready

The **FLEXCAN** shunt is compatible with all types of batteries including Lithium.

CAN BUS interface*

The FLEXCAN shunt can be used in stand alone with an electrical appliance or with a screen.

(* Compliant CAN BUS on demand)

AC VOLTMETER

Warranty 3 years

230VAC

Part reference
002131



Characteristics

- **Type** : Digital AC Voltmeter, self-powered (2-wires)
- **Measurement Range** : 30 to 264 VAC RMS
- **Display** : LED, 3½ digits, digit height 9.4 mm (0.37")
- **Power Supply** : Self-powered by measured AC voltage (no external supply required)
- **Typical Power Consumption** : ~7 mA
- **Panel Cutout Dimensions** : 33.93 mm × 21.29 mm
- **Housing** : Epoxy-encapsulated polycarbonate case - moisture, shock and vibration resistant
- **Operating Temperature Range** : –25 °C to +60 °C

Features / Benefits

- Self-powered — no external supply required
- Bright LED display, easy to read from a distance
- Built-in reverse polarity protection
- Ideal replacement for older analogue panel voltmeters for AC measurements

Typical applications

Instrumentation, AC monitoring in control panels, compact measurement setups where readability and simplicity are required without additional power supply.

AC VOLTMETER allows compliance with ISO13297:2020 §16.2 & 16.3 when using a generator, AC motor or inverter.

FREQ

Warranty 2 years

8.9/10 Repairability index

230VAC



Presentation

Frequency converters named FREQ are able to convert 50Hz into 60Hz or vice versa. They are perfectly fitted to install devices that cannot cope with various frequency current like some refrigerators, computers, etc.

To choose a frequency converter, you must measure the inrush current of your device. Then increase this current by 50% in order to determine the model of FREQ that you need.

Part number	FREQ700	FREQ1000	FREQ1500	FREQ2200	FREQ3000
Power	700VA	1000VA	1500VA	2200VA	3000VA
Power with frequency conversion	490VA	700VA	1050VA	1540VA	2100VA
Input voltage tolerance	230 VAC +/-20%				
Input rated frequency	50Hz - 60Hz +/- 5%				
Input current distortion	<7%				
Output frequency	50Hz or 60Hz selectable				
Weight	12.5kg	14.9kg	15.5kg	28.8kg	31.2kg
Dimensions (WxDxH) mm	158x422x235mm			190x446x333mm	
Recommended temperature	0-40°C (104°F) (and preferably 20-25°C (68-77°F) for battery life)				

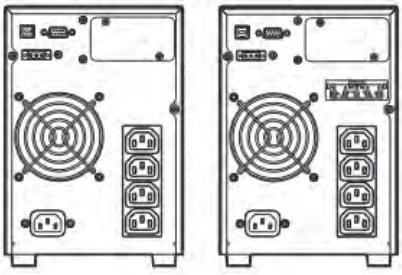

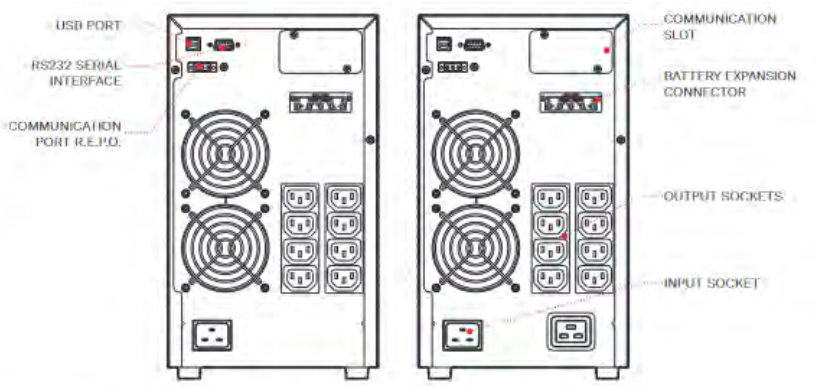

ZENPOWER

Warranty 3 years

8.9/10 Repairability index



"Smart management of the auxiliary Lithium battery in your motorhome"

Principle

The ZENPOWER is an intelligent electronic module designed to provide automatic and safe energy management between the alternator and the auxiliary Lithium battery of your RV.
It automatically connects or disconnects according to the alternator's operation, ensuring optimal charging and a continuous power supply of the habitation without micro-interruptions.

Why the ZENPOWER matters

- **Alternator protection :** limits current to the Lithium service battery to prevent overload
- **Starter battery protection :** always retains capacity for engine start
- **When the alternator stops:** the vehicle's power supply automatically and instantly switches to the auxiliary battery

Product description

When the **D+ terminal** of the ZENPOWER receives a voltage greater than **12V** (alternator producing energy), the ZENPOWER activates after **30 seconds** if the charging voltage remains above **11.2V**. It then connects the alternator to the auxiliary battery and limits the **charging current between 30A and 50A**, adjustable via an external rotary switch.
If the system voltage drops below **11V** for more than **90 seconds**, or when the **D+ terminal** drops to **0V** (alternator off), the ZENPOWER instantly (<1 ms) cuts the charging link and **allows the central system to be powered by the auxiliary battery**, ensuring **uninterrupted operation**. In this configuration, the auxiliary battery can deliver **up to 70A** to the vehicle's electrical network.

Beware

As the ZENPOWER does not include a DC/DC converter, battery charging depends directly on the alternator output voltage, compliant with Euro 5 and Euro 6 standards.

Part reference	ZEN12
Operating voltage	12V
Adjustable charging current	30 – 50A
Input voltage tolerance	230 VAC +/-20%
Maximum discharge current	70A
Response time	< 1 millisecond
Auto stop threshold	< 11V (after 90 s)
Activation threshold	> 11.2V (after 30 s)
Technology	MOSFET transistors (no relay)

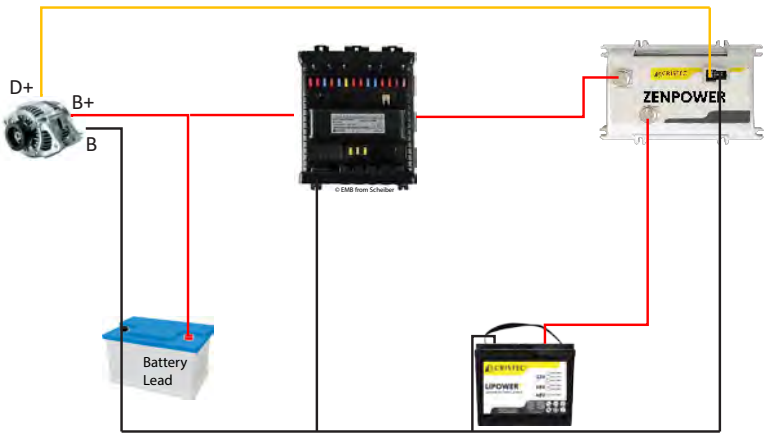

Showroom TROLLEY

CRISTEC ECOSYSTEM

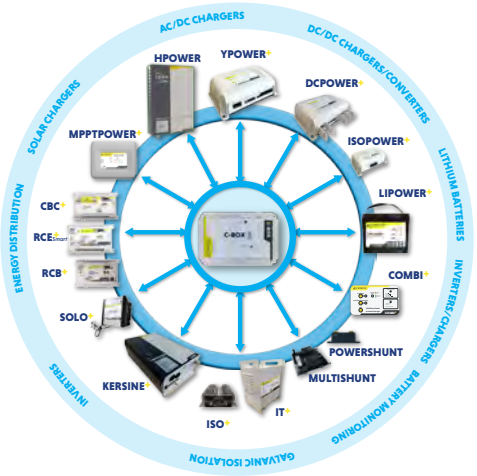



Functional Product Display

This fully operational display stand is ideal for showrooms, customer training sessions and trade shows. It provides an interactive and educational way to explore the complete CRISTEC product ecosystem. Its retractable legs make it easy to transport in a van.

CRISTEC Products installed

- YPOWER+ AC-DC charger YPO12-50STPL
- RCE+Smart battery splitter RCE160-2EM6-3SM6-PL
- RCB+ coupler relay RCB-ADJ-120
- MULTISHUNT 5
- DCPOWER+ DC-DC converter-charger DC12-24/30PL
- KERSINE+ DC-AC inverter : SOLO24-230/350-50
- Server C-BOX
- Touchscreen C-TOUCH-7
- SHUNT FLEXCAN 300A
- LiPOWER+ LiFeP04 Lithium Battery : LIP12-100-BMS * / LIP24-100-BMS *
- Galvanic Isolator ISO32PL

CRISTEC dummy products

- DC-DC charger HPO24-45-CERT-DUM
- Galvanic transformer : IT-3600-DUM
- Shore-power : UEYPOPL/12-40/3D-DUM

*Lithium batteries optional.

Part number
002251

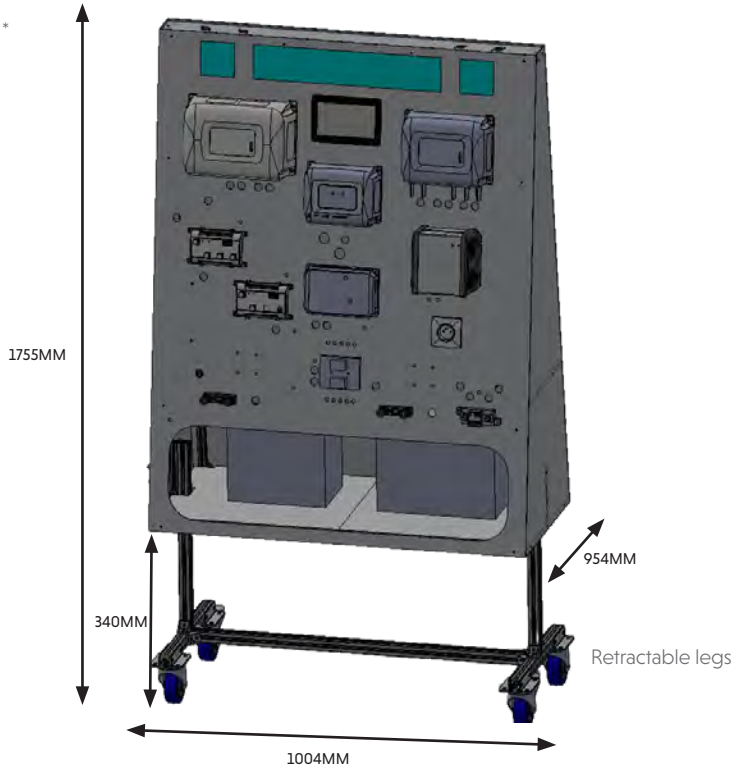





DISTRIBUTION NETWORK

A network of distributors and OEMs in over 50 countries



EUROPE

BULGARIA

Shiptechniks Ltd. Шипмехникс ЕООД

Blvd 8th Primorski Polk n°128 9000 Varna
+359 52 306 434
office@shiptechnics.com
www.shiptechnics.com

CROATIA/MONTENEGRO/SERBIA

METRIS

Stinice 12 21000 Split
+385 21538080
info@metris.hr
www.metris.hr

DENMARK

SEC SET

Mariendalsvje 28 8800 Viborg
+45 86741700
salling@sec-set.dk
www.setas.dk

FINLAND

ProNav

Vilhonvuorenkatu 12C 00500 Helsinki
+358 102291900
sales@pronav.fi
www.pronav.fi

NAVIX

Sähkömiehentie 2 21530 Paimio
+358 417314079
info@navix.fi
www.navix.fi

FRANCE

NAVICOM

ZA de Kerdroniou 32 rue Marcel Paul 29000 Quimper
navicom@navicom.fr
www.navicom.fr

PLASTIMO

21 rue Amiral Dordelin 56100 Lorient
+33 02 97 87 36 36
contact@plastimo.com
www.plastimo.com

Seimi

75 rue Amiral Troude 29200 Brest
Tel. +33 (0)2 98 46 11 02
info@seimi.com
www.seimi-equipements-marine.com

VDM Reya

ZI Toulon Est, 201 Avenue Irène et Jean Frédéric Joliot Curie, 83130 La Garde
+33 04 94 08 68 20
www.vdm-reya.com

AD NAUTIC USHIP abiship PHB

GERMANY

SVB

Gelsenkirchener Str. 25-27 D 28199 Bremen
0421 / 57290-0
info@svb.de
www.svb.de

KIEL Nautik

Konrad-Zuse-RING 30 24220 Flintbek
+49 43154442216
info@kiel-nautik.de
www.kiel-nautik.de

GREECE

ENEQ

49 Geroulanou str. 174 55 Alimos
+302109886621
info@eneq.gr
www.eneq.gr

ITALY

INDEMAR

via Guido Rossa 42 16012 Busalla
+39 010 9641927
info@indemar.com
www.indemar.com

MALTA

GB GAUCI BORDA

240 Msidaroad Yacht Marina GZR1400 Gzira
+356 21334255
info@gauciborda.com
www.gauciborda.com

Triq il-mithna ta'carrafa LQA 1521 Luqa
+356 21665642
josianne@eretric.com.mt
https://www.facebook.com/Eretric-Ltd

NORWAY

STRØM MARINEUTSTYR

Svennerudveien 38, 2016 Frogner
+47 23 23 39 70
mail@stroem.no
www.stroem.no

ABAS Marin

Grensevegen 252 - 2230 Skotterud
+47 90 94 49 33
alumin@abas.no
www.abas.no

POLAND

AIRMECH

Spolkaz ograniczona odpowi ul.zlote wzgórza 2
83-000 Juszkowo
+48 797719374
info@airmech.pl
www.airmech.pl

ROMANIA

Str. Abatorului 22 Tulcea Romania 820013
+40 726627463
office@marinelife.ro
www.marinelife.ro

SPAIN/PORTUGAL

montes da Barxa, 6 p.i porto do Molle
36350Nigran
+34 986354000
baitra@baitra.com
www.baitra.com

SLOVENIA

Veliko Mlačevo 64, 1290 Grosuplje
+386 17861140
sportmar@sportmar.si
www.sportmar.si

SWEDEN

Baggakersgatan 4A 43153 Mölndal
+46 0317618580
info@sellpower.se
www.sellpower.se

SWITZERLAND

rue de la Fontenette 33 1227 Carouge-Genève
+41 793422723
alain-muller@bluewin.ch
www.muller-electronique-navale.letabatha.net

TURKEY

VİKİNG DENİZCİLİK SANAYİ VE TİCARET A.Ş.
Zümrütevler Mah. Ertuğrulgazi Cad. No: 8, Maltepe / Istanbul, Türkiye
+90 536 985 22 48 info@vikingdenizcilik.com
www.vikingdenizcilik.com

UNITED KINGDOM

9 Fernacre Business Park Budds Lane SO51 0HA
Romsey Hampshire
+44 (0)1794 523 900
info@advanceyacht.co.uk
www.advanceyacht.co.uk

19f Spital Road, Maldon, Essex United Kingdom CM9 6DY
+44(0)1621 853 003
sales@mantsbrite.com
www.mantsbrite.com

AMERICA

BRAZIL

R. Jandiatuba 506 Conjunto 408A Vila Andrade
05716-150 São Paulo
+55 11 2645-4877
www.i-sea.com.br

CANADA

8194 Ontario Street V5X 3E3 Vancouver B.C
(604) 325-5233
sales@rekord-marine.com
www.rekord.esamco.com

CARIBBEAN

Marina Du Marin, Bd Allegre, Le Marin 97290, Martinique
+596 596747662
contact@diginav.fr
www.diginav.fr

ELECTRO NAUTIC SA

144 impasse E.Dessout 97122 Baie Mahault, Guadeloupe
+33 590213670
electronautic@wanadoo.fr

29 Wellington Road,Cole Bay, St Maarten / SXM
+1 721 544 2051 / 4512 / 4921
sales@electecsxm.com
www. electec.info

MEXICO

Av.López Portillo, Mz5, Lote6 SM84, Local14
CP: 77520 Cancun
52 (998) 843 0253
ventas@maramarlin.com
www.marinesupplies.mx

UNITED STATES OF AMERICA

660 Riverland Dr Ste B Charleston SC 29412
(843) 885-8644
info@marinebeam.com
www.store.marinebeam.com

AFRICA

EGYPTE

10396 Hejaz Road, Hurghada 1,
Red Sea Governorate, HURGHADA
shareef@marinayachts.net
www.marinayacht.ae

ANGOLA

Rua Murtala Mohamed , Ilha de Luanda
Clube Náutico - Luanda, ANGOLA
dac@proa-angola.com
www.proa-angola.com

ASIA

EMIRATS ARABES UNIS

112, 1st Floor, Al Souk Mall, Jumeirah 5, Umm Suqeim 2, Dubai
+971 50 514 4211
sales@alphamarineequipment.com
www.alphamarineequipment.com

Office 20, DMC SAGF Dubai Maritime City, Dubai
+971501489080
info@aimarmarine.com
www.aimarmarine.com

JAPAN/SOUTH KOREA

3-18-1 Marunouchi, Naka-ku 460-0002 Nagoya
+81 529715700
dives@asahi-net.or.jp
www.dives-japan.com

KUWAIT

Abdul Aziz Al - Usaimi Complex, Block-1, Street - 6, Area-23, Shuwaikh
sales@alsabihmarine.com
www.alsabihmarine.com

LEBANON

Tabarja El Mina PO BOX : 563 Jounieh
+ 961 (0)9 850373 / 4
paul@azzisport.com
www.azzisport.com

SINGAPORE/MALAYSIA/INDONESIA

623 Aljunied Road, #04-10 Aljunied Industrial Complex
389835 Singapore
+65 6447 3004
wai@marine-intl.com.sg
www.marine-intl.com.sg

OCEANIA

POLYNESIA

OCEAN 2000 marine supplies

73 avenue Pomare V 98716, Papeete-Tahiti
+689 838393
j.ramon@ocean2000marine.pf

CRISTEC
on-board energy

23 ZA Penn ar Roz
29150 Châteaulin
FRANCE

Tel: +33 298 538 082
info@cristec.fr
www.cristec.fr

YOU ARE :

OEM, shipyard, boat-builder, electrician, dealer, distributor or experienced sailor ?

You need to design a robust electrical power system ?

SO, PLEASE CONTACT US !

To help you with your project, we provide complimentary advice, recommendations, and 3D files of our products.

Tel : +33 298 538 082 Mail : info@cristec.fr

1983 Since | High-end products | In more than 50 countries