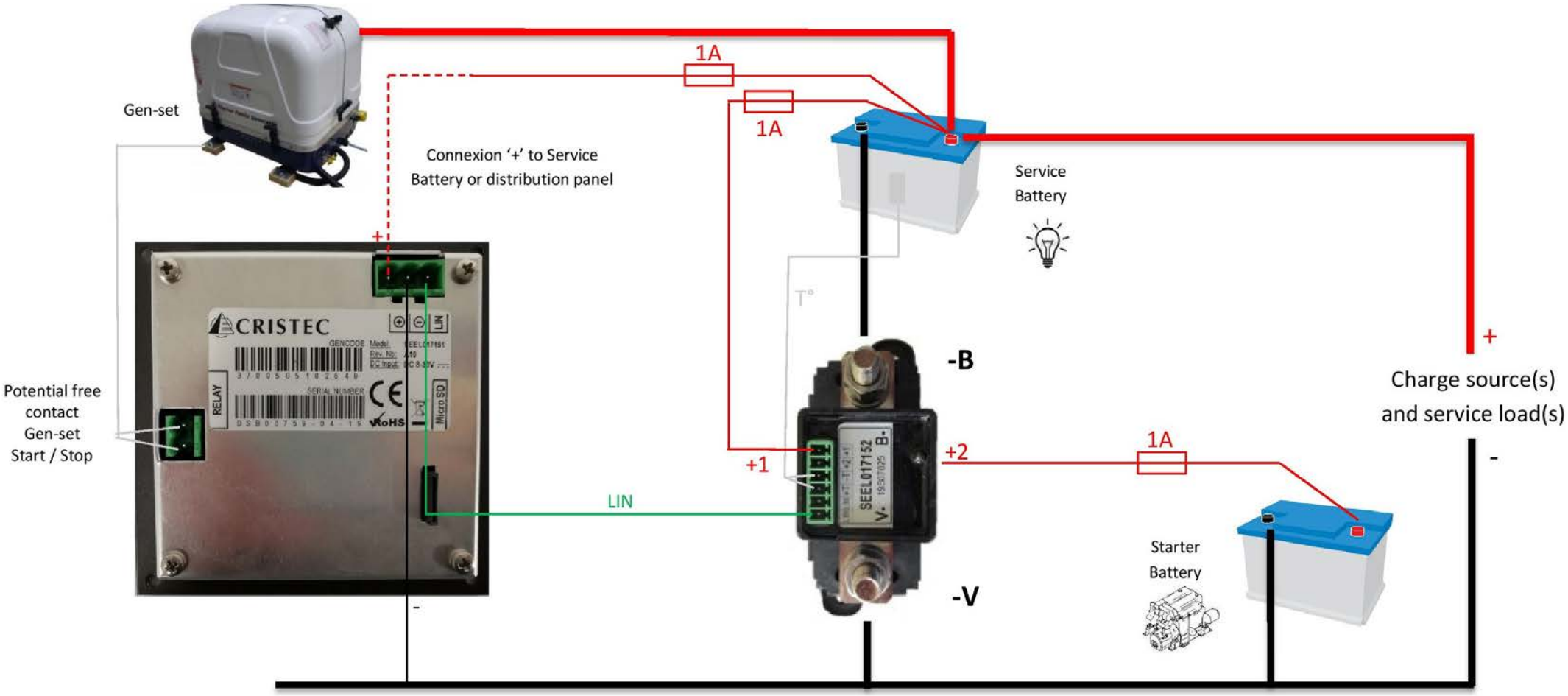
Gen-set
1A
1A
Connexion '+' to Service
Battery or distribution panel
Service
Battery
+
CRISTEC
LIN
RELAY
Micro SD
Potential free
contact
Gen-set
Start / Stop
-
T°
-B
+1
+2
1A
LIN
SEEL017152
-V
Starter
Battery
+
Charge source(s)
and service load(s)
-

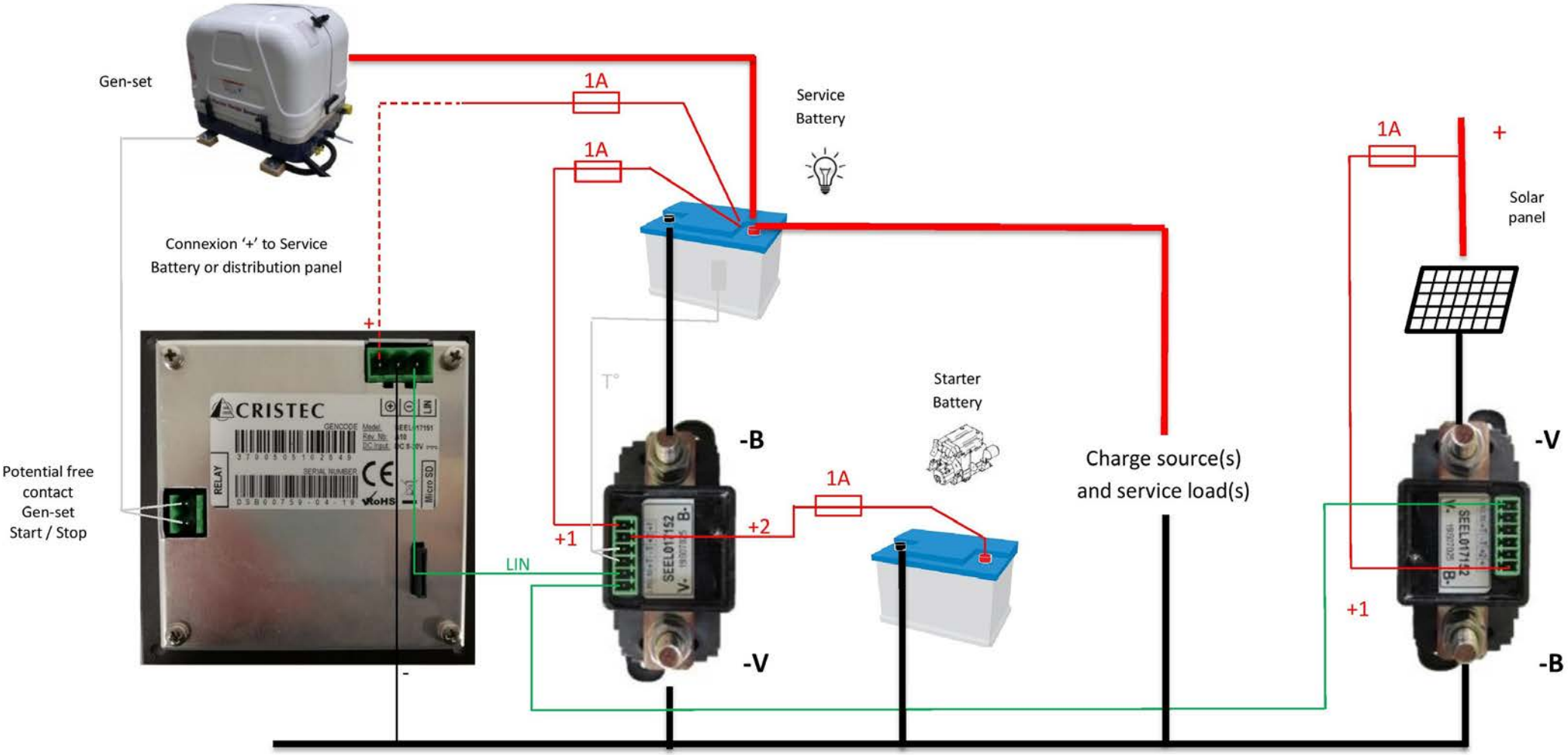
Gen-set
1A
1A
Service
Battery
1A
+
Solar
panel
Connexion '+' to Service
Battery or distribution panel
+
CRISTEC
RELAY
Micro SD
Potential free
contact
Gen-set
Start / Stop
-
T°
-B
-V
+1
+2
1A
LIN
Starter
Battery
Charge source(s)
and service load(s)
-V
+1
-B

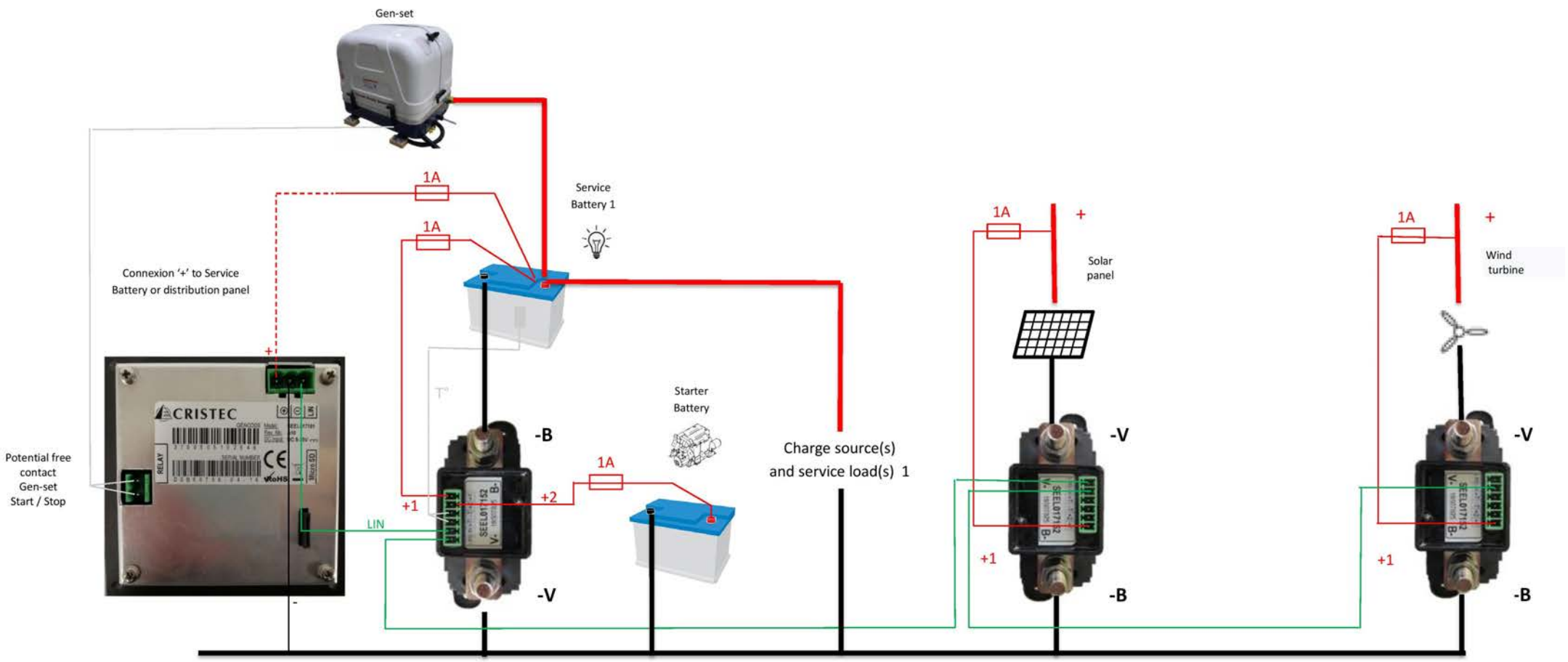
Gen-set
1A
1A
Service
Battery 1
Connexion '+' to Service
Battery or distribution panel
+
CRISTEC
RELAY
Potential free
contact
Gen-set
Start / Stop
-
LIN
+1
-B
-V
+2
1A
Starter
Battery
Charge source(s)
and service load(s) 1
1A
+
Solar
panel
-V
+1
-B
1A
+
Wind
turbine
-V
+1
-B

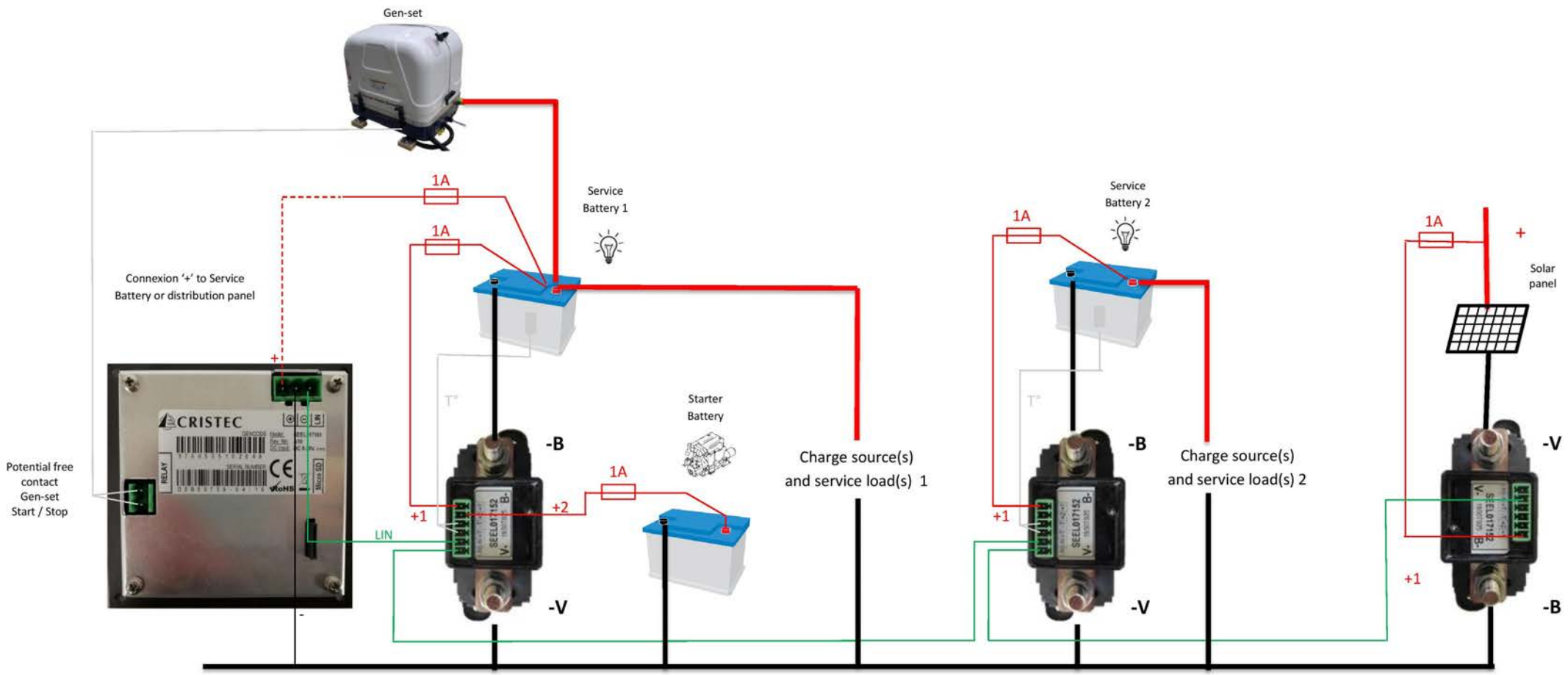
Gen-set
1A
1A
Service
Battery 1
Connexion '+' to Service
Battery or distribution panel
+
CRISTEC
RELAY
Potential free
contact
Gen-set
Start / Stop
-
LIN
+1
+2
-B
-V
1A
Starter
Battery
Charge source(s)
and service load(s) 1
1A
Service
Battery 2
+1
-B
-V
Charge source(s)
and service load(s) 2
1A
+
Solar
panel
+1
-V
-B

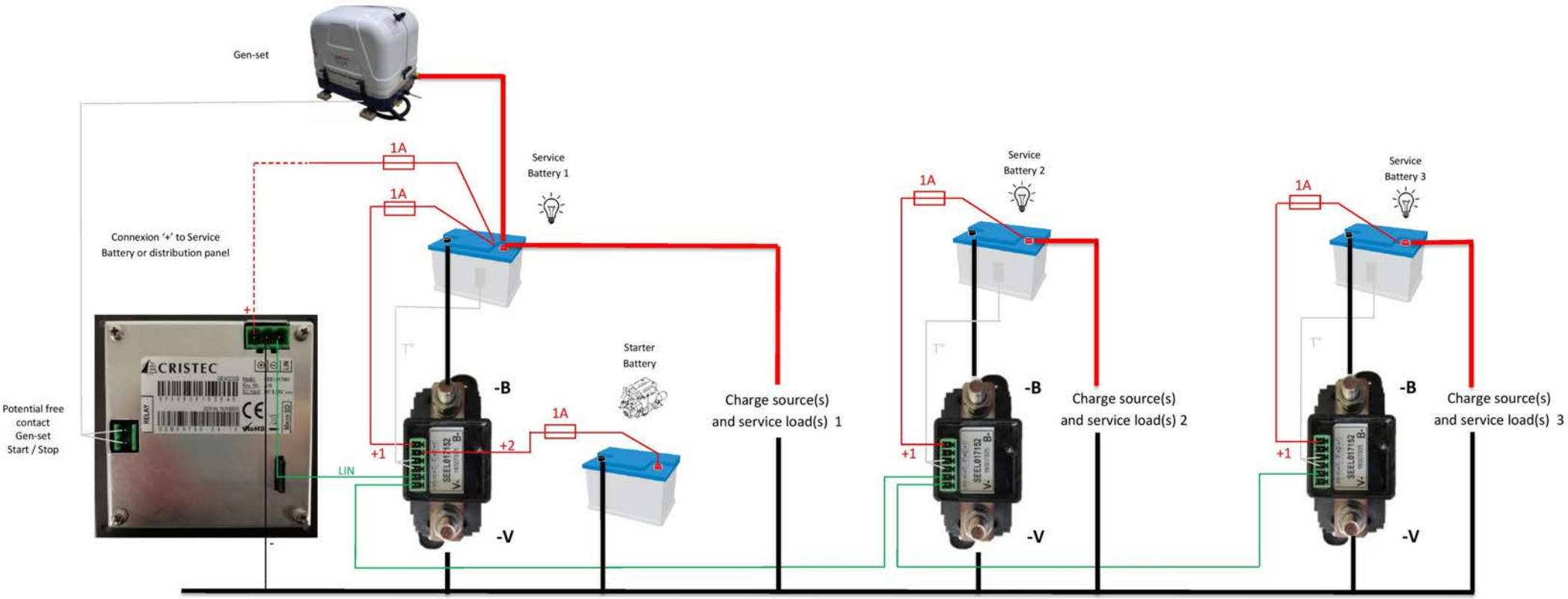
Gen-set
1A
1A
Service
Battery 1
Connexion '+' to Service
Battery or distribution panel
+
CRISTEC
RELAY
Potential free
contact
Gen-set
Start / Stop
-
LIN
+1
+2
-B
-V
1A
Starter
Battery
Charge source(s)
and service load(s) 1
1A
Service
Battery 2
+1
-B
-V
Charge source(s)
and service load(s) 2
1A
Service
Battery 3
+1
-B
-V
Charge source(s)
and service load(s) 3

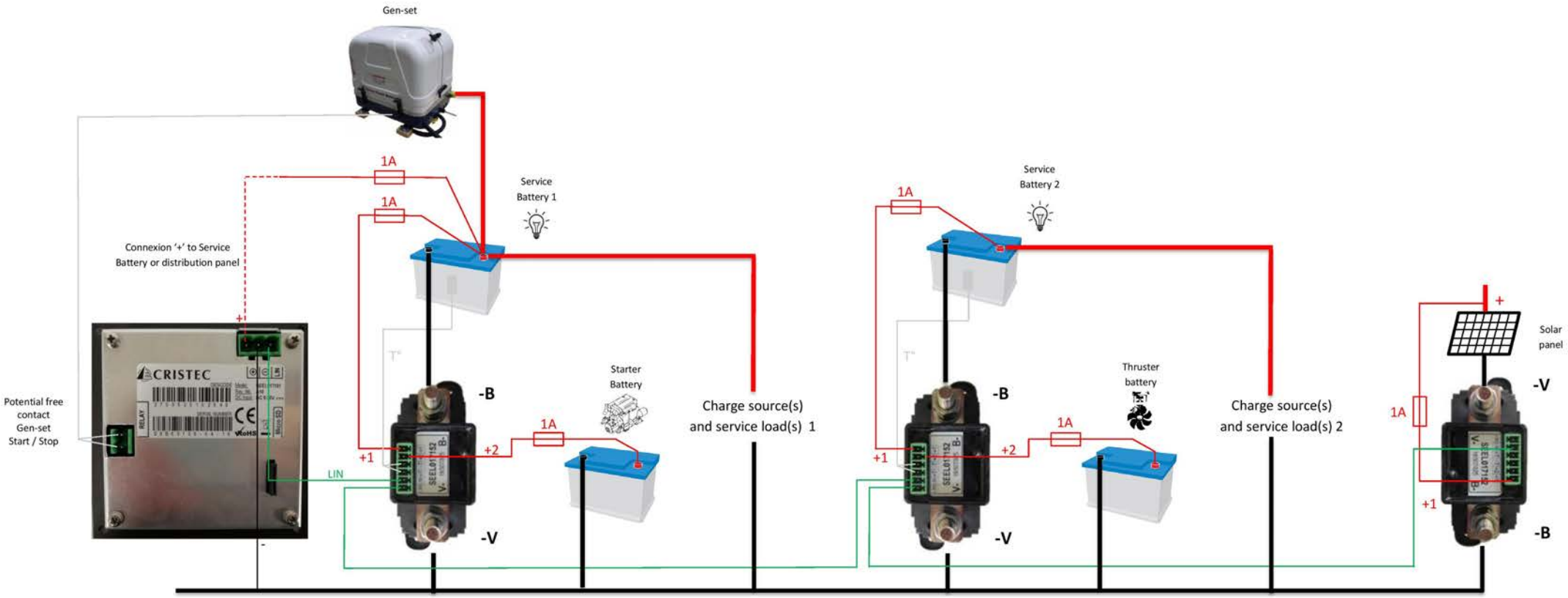
Gen-set
1A
1A
Service
Battery 1
Connexion '+' to Service
Battery or distribution panel
+
CRISTEC
RELAY
Potential free
contact
Gen-set
Start / Stop
-
LIN
-B
-V
+1
+2
1A
Starter
Battery
Charge source(s)
and service load(s) 1
1A
Service
Battery 2
-B
-V
+1
+2
1A
Thruster
battery
Charge source(s)
and service load(s) 2
+
Solar
panel
1A
-V
+1
-B

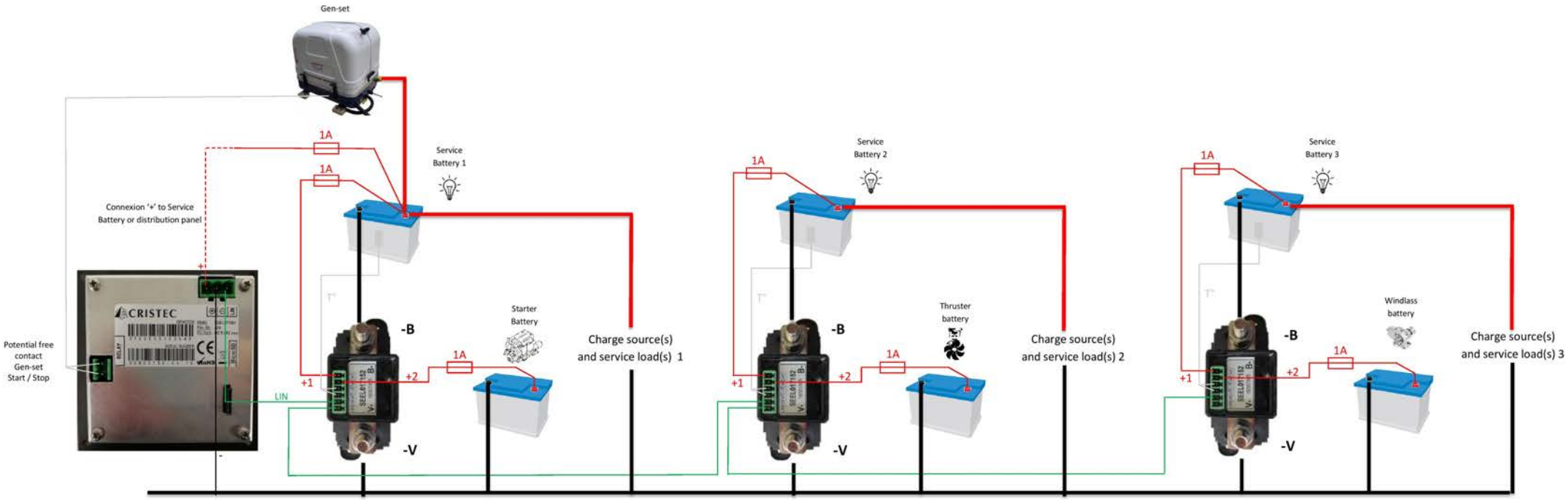
Gen-set
1A
1A
Service
Battery 1
Connexion '+' to Service
Battery or distribution panel
+
CRISTEC
Potential free
contact
Gen-set
Start / Stop
-
LIN
-B
-V
+1
+2
1A
Starter
Battery
Charge source(s)
and service load(s) 1
1A
Service
Battery 2
Thruster
battery
Charge source(s)
and service load(s) 2
1A
Service
Battery 3
Windlass
battery
Charge source(s)
and service load(s) 3